OWNER'S MANUAL 2026

READY TO RACE

1390 SUPER ADVENTURE S

ITEM NO.: 3240282EN

Dear KTM customer,

Congratulations on your decision to purchase a KTM motorcycle. You are now the owner of a state-of-the-art sports vehicle which, with proper care, will bring you pleasure for a long time to come.

We hope you enjoy your bike and have a safe journey at all times!

You can enter the serial numbers of your vehicle below to find the serial numbers more quickly if required:

Vehicle identification number (p. 16)	Stamp of the contractual partner
Engine number (p. 16)	

The owner's manual contained the latest information for this model series at the time of publication. However, minor differences due to further developments in design cannot be ruled out completely.

All specifications are non-binding. KTM Sportmotorcycle GmbH specifically reserves the right to modify or delete technical specifications, prices, colors, forms, materials, services, designs, equipment, etc., without prior notice and without specifying reasons, to adapt these to local conditions, as well as to stop production of a particular model without prior notice. KTM accepts no liability for delivery options, differences from illustrations and descriptions, misprints, and other errors. The models portrayed partly contain special equipment that does not belong to the regular scope of delivery.

© 2026 KTM Sportmotorcycle GmbH, Mattighofen Austria
All rights reserved. Figures: Mitterbauer / Visus Studios / KISKA / KTM
Written permission from the copyright owner is required before any duplication or reproduction.

ISO 9001

KTM applies quality assurance processes that lead to the highest possible product quality as defined in the ISO 9001 international quality management standard.

12 100 6061

REG.NO. 12 100 6061

Issuing institution:
TÜV SÜD Management Service GmbH

KTM Sportmotorcycle GmbH
Stallhofnerstraße 3
5230 Mattighofen, Austria

This document is valid for:

1390 SUPER ADVENTURE S EU (F9903Z4, F9903Z5)

1390 SUPER ADVENTURE S AR (F9942Z7)

1390 SUPER ADVENTURE S BR (F9940Z7)

3240282en

28/01/2026

Table of contents

1 Means of representation 9

1.1 Conventions 9
1.1.1 Icons 9
1.1.2 Formatting 9
1.1.3 Abbreviations 9

2 Safety 10

2.1 Safety instructions 10
2.2 Use definition – intended use 10
2.3 Safe use 10
2.4 Ban on tampering 11
2.5 Work rules 11
2.6 Environment 12
2.7 Improper use 12
2.8 Protective clothing 12
2.9 Owner's manual 12

3 Important notes 13

3.1 Manufacturer's warranty, implied warranty 13
3.2 Auxiliary material, operating material 13
3.3 Spare parts, accessories 13
3.4 Service 13
3.5 Figures 13
3.6 Customer service 13
3.7 **Roadside Assistance** 13

4 View of the vehicle 14

4.1 View of vehicle, front left (example) 14
4.2 View of vehicle, rear right (example) 15

5 Serial number 16

5.1 Vehicle identification number 16
5.2 Type approval label 16
5.3 Engine number 16
5.4 Fork part number 16
5.5 Shock absorber part number 17
5.6 Steering damper article number 17

6 Controls 18

6.1 Clutch lever 18
6.2 Handbrake lever 18
6.3 Throttle grip 18
6.4 Combination switch, left 18
6.5 Light switch 19
6.6 Cruise control buttons 19
6.7 Adaptive cruise control buttons (optional) 21
6.8 +RES/-SET button 23
6.9 UP/DOWN button 23
6.10 Menu buttons 24
6.11 Turn signal switch 24
6.12 Horn button 25
6.13 Combination switch, right 25
6.14 Hazard warning flasher switch 25
6.15 Mode switch 26
6.16 RACE ON button 26
6.17 Start button/kill switch 27
6.18 Steering lock (antenna) 27
6.19 Locking the steering 28
6.20 Unlocking the steering 28
6.21 immobilizer 28
6.22 RACE ON key 29
6.23 anti-relay attack 29
6.24 USB–C port 30
6.25 Opening the fuel tank cap 31
6.26 Closing the fuel tank cap 32
6.27 Fuel petcocks 32
6.28 Opening storage compartment 33
6.29 Closing storage compartment 33
6.30 Passenger seat unlocking 34
6.31 Passenger seat emergency release 34
6.32 Grab handles 34
6.33 Baggage carrier 34
6.34 On-board tool kit 35
6.35 Passenger footpegs 35
6.36 Gear shift lever 35
6.37 Brake pedal 36
6.38 Side stand 36

7 Dashboard 37

7.1 dashboard 37
7.2 **Touchscreen** 38
7.3 demo mode 38
7.4 activation and testing 39
7.4.1 Activation 39
7.4.2 Test 39
7.5 warnings 40
7.6 ice warning 41
7.7 Warning for rider to take over control (optional) 41
7.8 indicator lamps 42
7.9 Display 44
7.10 Ride mode **Rally** (optional) 44
7.11 Gear display 46
7.12 speed 46
7.13 shift light 47
7.14 Speed 48
7.15 Cruise control indicator 48
7.16 Adaptive Cruise Control indicator (optional) 49
7.17 Distance Assist display (optional) 49
7.18 Ride mode display 50

7.19 fuel level display 51
7.20 time 51
7.21 ambient air temperature indicator 52
7.22 heated grip (optional) 52
7.23 seat heating (optional) 53
7.24 Additional lighting (optional) 53
7.25 coolant temperature indicator 54
7.26 **Splitscreen** display 55
7.27 display **Group Riding** (optional) 56
7.28 Distance warning display (optional) 56
7.29 Overtaking Suppression indicator (optional) 57
7.30 display **Favourites** 58
7.31 Navigation display (optional) 58
7.32 Audio display (optional) 59
7.33 display **Telemetry** (optional) 59
7.34 Call display 60

8 Menu 61

8.1 Menu 61
8.2 Open menu 61
8.3 **Ride** 62
8.3.1 Ride mode 62
8.3.2 Configure ride mode 63
8.3.3 **Fog Light** (optional) 78
8.3.4 Radar assistance (optional) 78
8.4 info 87
8.4.1 Trip info 87
8.4.2 info 90
8.4.3 E-SIM 90
8.4.4 Mobile 91
8.4.5 Communication system 91
8.4.6 warnings 92
8.4.7 Extra functions 92
8.4.8 Demo mode 93
8.5 Heating 93
8.5.1 heated grip 94
8.5.2 Rider's seat heater 94
8.6 navigation 95
8.6.1 Search 95
8.6.2 Choose on Map 96
8.6.3 Stop navigation 96
8.6.4 Overview of routes 97
8.6.5 Settings 97
8.7 Apps 100
8.7.1 Calls 101
8.7.2 Music 101
8.8 Settings 102
8.8.1 favorites 102
8.8.2 Paddle buttons 103
8.8.3 **Connectivity** 104
8.8.4 TPMS warnings 111
8.8.5 Case locking setting 112
8.8.6 Shift Light 113
8.8.7 **Coming Home** light 114
8.8.8 Light system warnings 115
8.8.9 daytime running light 115
8.8.10 Button Illumination 116
8.8.11 Cornering light test 116
8.8.12 Setting the time and date 116
8.8.13 Units 119
8.8.14 Language 122
8.8.15 Heating setup 123
8.8.16 Case setup 125
8.8.17 Anti relay attack 125
8.8.18 **Touchscreen** 126
8.8.19 Factory setting 126

9 Ergonomics 127

9.1 Setting the front rider's seat 127
9.2 Handlebar position 127
9.3 Adjusting the handlebar position 🔧 128
9.4 Adjusting the windshield 129
9.5 Adjusting the basic position of the clutch lever 129
9.6 Adjusting the basic position of the hand brake lever 129
9.7 Checking the basic position of the gear shift lever 130
9.8 Adjusting the basic position of the gear shift lever 🔧 130
9.9 Setting the shift lever stub 131
9.10 Adjusting the basic position of the brake pedal 🔧 131

10 Preparing for use 133

10.1 Notes on preparing for first use 133
10.2 Running in the engine 134
10.3 Loading the vehicle 134

11 Riding instructions 136

11.1 Checks and maintenance measures when preparing for use 136
11.2 Starting 136
11.3 Starting off 138
11.4 Quickshifter+ (optional) 138
11.5 Starting with **HHC** (optional) 138
11.6 Shifting, riding 139
11.7 **MSR** (optional) 142
11.8 Braking 142
11.9 Stop, park 143

11.10 Transportation 144
11.11 Towing in the event of a breakdown 145
11.12 Refueling 145

12 Service schedule 147

12.1 Service work 147

13 Suspension setting 149

13.1 Fork/shock absorber 149
13.2 Preload adjuster 149
13.3 **Suspension Mode** 150

14 Service work on the chassis 151

14.1 Raising the motorcycle with rear lifting gear 151
14.2 Removing the rear of the motorcycle from the lifting gear 151
14.3 Lifting the motorcycle with the front lifting gear 151
14.4 Taking the motorcycle off the front lifting gear 152
14.5 Removing the passenger seat 152
14.6 Mounting the passenger seat 153
14.7 Remove the front rider's seat 153
14.8 Mounting the front rider's seat 153
14.9 Checking the chain for dirt 154
14.10 Cleaning the chain 154
14.11 Checking the chain tension 155
14.12 Adjusting the chain tension 156
14.13 Checking the chain, rear sprocket, and engine sprocket 157
14.14 Checking/correcting the fluid level of hydraulic clutch 158
14.15 Removing the windshield 159
14.16 Installing the windshield 159
14.17 Removing front right wing 160
14.18 Installing the front right wing 160
14.19 Removing the skid plate 160
14.20 Installing the skid plate 160
14.21 Removing the oil plug cover 161
14.22 Installing the oil plug cover 161
14.23 Removing the front top fender 161
14.24 Installing the front top fender 161
14.25 Cleaning the dust boots of the fork legs 162

15 Brake system 163

15.1 Anti-lock braking system 163
15.1.1 MSC 164
15.2 Checking the brake discs 165
15.3 Checking the brake fluid level for the front brake 165
15.4 Adding brake fluid for the front brake 166
15.5 Checking that the brake pads of the front brake are secured 167
15.6 Checking the brake fluid level for the rear brake 168
15.7 Adding brake fluid for the rear brake 168
15.8 Checking that the brake pads of the rear brake are secured 170

16 Wheels, tires 171

16.1 Removing the front wheel 171
16.2 Installing the front wheel 172
16.3 Removing the rear wheel 174
16.4 Installing the rear wheel 175
16.5 Checking the rear hub damping rubber pieces 176
16.6 Checking the tire condition 177
16.7 Checking the tire pressure 178
16.8 Using tire repair spray 179

17 Electrics 180

17.1 Low beam 180
17.2 high beam 180
17.3 daytime running light 180
17.4 Cornering light 181
17.5 Removing the 12 V battery 181
17.6 Installing the 12 V battery 182
17.7 Charging the 12 V battery 183
17.8 Changing the RACE ON key battery 186
17.9 Changing the main fuse 187
17.10 Changing the fuses in the fuse box 188
17.11 Checking the headlight setting 190
17.12 Adjusting the headlight range 190
17.13 Diagnostic connector 191
17.14 Accessories circuit 1 and accessories circuit 2 front 191
17.15 Accessories circuit 1 and accessories circuit 2, rear 192
17.16 Setting the time and date 192
17.17 Adaptive cruise control system (optional) 194

18 Cooling system 196

18.1 Checking the coolant level in the compensating tank 196
18.2 Correcting the coolant level in the compensating tank 196

19 Tuning the engine 198

19.1 **Ride Mode** 198
19.2 Motorcycle traction control 199
19.3 slip adjustment (optional) 199
19.4 **Throttle Response** (optional) 200

20 Service work on the engine 201

20.1 Checking the engine oil level 201
20.2 Changing the engine oil and oil filter, cleaning the oil screens 201
20.3 Adding engine oil 205

21 Cleaning, care 207

21.1 Cleaning the motorcycle 207
21.2 Checks and maintenance steps for winter operation 208

22 Storage 210

22.1 Storage 210
22.2 Preparing for use after storage 211

23 troubleshooting 212

23.1 Symptoms 212

24 Technical specifications 214

24.1 Engine 214
24.1.1 Technical data - engine 214
24.2 Chassis 215
24.2.1 Technical data - chassis 215
24.2.2 Technical data - tires 216
24.2.3 Capacities - fuel system 216
24.2.4 Fuel 217
24.3 Electrics 217
24.3.1 Battery 217
24.3.2 Fuses 217
24.3.3 Lamps 217
24.4 Fork 218
24.4.1 Technical data - fork 218
24.4.2 Capacities - fork 218
24.5 Shock absorber 218
24.5.1 Technical data - shock absorber 218
24.6 Tightening torque 219
24.6.1 engine tightening torques 219
24.6.2 Chassis tightening torques 223

25 Declarations of conformity 230

25.1 Declarations of conformity 230
25.2 Country-specific declarations of conformity (KTM RACE ON system 1) 230
25.3 Country-specific declarations of conformity (KTM RACE ON system 2) 231
25.4 Country-specific declarations of conformity (CCU 3) 232
25.5 Country-specific declarations of conformity (front radar sensor) 233
25.6 Country-specific declarations of conformity (Tire Pressure Monitoring System) 233

26 Open source 234

26.1 Information on open source software 234

Notes 235

A Technical terms 235

B Fuels..... 236

C Operating supplies..... 237

D Cleaning agents..... 239

E Icons..... 240

E.1 Symbol colors 240
E.1.1 Red symbols..... 240
E.1.2 Yellow and orange symbols 240
E.1.3 Green and blue symbols 240

Index 242

1.1 Conventions

1.1.1 Icons

✓	Indicates a desired result (e.g. of a work step or a function).
✗	Indicates an undesired result (e.g. of a work step or a function).
	All work marked with this symbol requires specialist knowledge and technical understanding. Ensure that this work is carried out or supervised by trained personnel from an authorized contractual partner, and that any special tools required are used.
	Indicates a page reference.
	Indicates information with more details.
	Indicates a tip, e.g. to simplify work.
»	Indicates the result from a test step.
◀	Indicates the end of an activity, including any rework.

1.1.2 Formatting

Proprietary name	Indicates a proprietary name.
Name ®	Indicates a protected name.
Brand ™	Indicates a brand available on the open market.
Underlined terms	Refer to technical details of the vehicle or indicate technical terms that are explained in the glossary.

1.1.3 Abbreviations

2–pc.	two-part
Part no.	Part number
or	respectively
approx.	circa
etc.	et cetera
poss.	possibly/possible
if necessary	if necessary
cmpl.	complete
min.	at least
no.	number
no fig.	no figure
s.	see
among others	among others/not limited to
and the like	and the like
etc.	et cetera
cf.	compare
e.g.	for example

2.1 Safety instructions

Function of the safety instruction

Safety instruction brings attention to dangers when handling the product. Hazards are classified, named, described, and supplemented with information on how to avoid them.

- If there is a safety instruction before a list of instructions, the danger exists throughout the entire activity.
- If there is a safety instruction immediately before an instruction, the next step presents a danger.

Safety instruction layout

All safety instructions are identified by a signal word and a warning symbol. The combination of signal word and warning symbol determines the degree of danger.

DANGER
Indicates an imminent danger that leads to serious injury or death.

WARNING
Indicates a potentially imminent danger that could lead to serious injury or death.

CAUTION
Indicates a potentially imminent danger that can lead to minor or slight injuries.

NOTE
Indicates a situation that can lead to damage to the product or the product environment.

NOTE
Indicates a situation that can lead to environmental damage.

2.2 Use definition – intended use

The vehicle is designed and constructed to withstand the usual demands of regular traffic and use on gentle terrain (unpaved roads). This vehicle is not suitable for use on race tracks.

Note
This vehicle is only authorized for operation on public roads in its homologated version.

2.3 Safe use

DANGER
Danger of accidents A rider who is not fit to ride poses a danger to themself and to others.
– Do not operate the vehicle if you are not fit to ride due to alcohol, drugs, or medication.
– Do not operate the vehicle if you are physically or mentally incapable of doing so.

DANGER
Danger of poisoning Exhaust gases are toxic and inhaling them may result in unconsciousness and death.
– Always ensure that there is sufficient ventilation when running the engine.
– Use suitable exhaust extraction when starting or running the engine in an enclosed space.

WARNING
Danger of burns Some vehicle components become hot when the vehicle is operated.
– Do not touch any parts such as the exhaust system, radiator, engine, damper, or brake system before the vehicle parts have cooled down.
– Allow the vehicle parts to cool down before performing any work on the vehicle.

The vehicle should only be used when it is in perfect technical condition, for its intended purpose, and in a safe and environmentally-friendly manner.

The vehicle must only be used by trained persons. An appropriate driver's license is needed to drive the vehicle on public roads.

Have any faults that impair safety immediately remedied by an authorized contractual partner.

Adhere to the information and warning labels on the vehicle.

2.4 Ban on tampering

No changes may be made to the noise control equipment and components.

Tampering that is prohibited

- Removing or disabling any devices or components used for noise control before the new vehicle is sold or delivered to the end customer.
- Removing or disabling any device or component used for noise control for purposes other than service, repair, or replacement during the service life of the vehicle.
- Use of the vehicle after a device or component used for noise control has been removed, disabled, or inadequately maintained.

Examples of prohibited tampering

- Removing or drilling through rear mufflers, baffle plates, manifolds, or other components that conduct exhaust gases.
- Removing or puncturing parts of the intake system.
- Replacing moving parts of the vehicle, or parts of the exhaust system or intake system, with parts other than those specified by the manufacturer.

2.5 Work rules

Unless specified otherwise, the ignition must be switched off during all work (models with ignition lock, models with transponder key) or the engine must be at a standstill (models without ignition lock or transponder key).

Special tools are required for some work. The tools are not part of the vehicle, but can be ordered using the number in parentheses. Example: bearing puller (15112017000)

Unless otherwise noted, normal conditions apply to all tasks and descriptions.

Ambient temperature	20 °C (68.0 °F)
Ambient air pressure	1,013 mbar (14.69 psi)
Relative air humidity	60 ±5 %

During assembly, use new parts to replace parts which cannot be reused (e.g. self-locking screws and nuts, expansion screws, seals, sealing rings, O-rings, pins, and lock washers).

A thread lock (e.g. **Loctite®**) is required for some screw connections. Observe the manufacturer's specific instructions for use.

If thread lock (e.g. **Precote®**) has already been applied to a new part, do not apply any additional thread lock.

After disassembly, clean the parts that are to be reused and check them for damage and wear. Replace damaged or worn parts.

After completing a repair or service, check the operating safety of the vehicle.

2.6 Environment

Handling the vehicle responsibly reduces the risk of conflict with other road users and the surrounding area. The future of motorcycling also depends on using motorcycles legally, being environmentally conscious and respecting the rights of others.

When disposing of used oil, other operating and auxiliary fluids, and used components, the laws and regulations of the respective country must be observed.

As motorcycles are not subject to the EU regulations governing the disposal of end-of-life vehicles, there are no legal regulations that pertain to the disposal of an end-of-life motorcycle. More information is available from the authorized contractual partner.

2.7 Improper use

The vehicle may only be used as intended.

Improper use can result in danger to people, property and the environment.

Any use of the vehicle beyond the intended and defined use constitutes misuse.

Improper use includes the use of operating and auxiliary materials that do not meet the required specifications for the respective use.

2.8 Protective clothing

WARNING

Risk of injury Missing or inadequate protective clothing increases the risk of injury.

- Wear appropriate protective clothing such as helmet, boots, gloves as well as pants and a jacket with protectors on all rides.
- Always wear protective clothing that is in good condition and meets the legal regulations.

2.9 Owner's manual

Read this owner's manual carefully and in full before riding off for the first time. The owner's manual contains information and tips on how to operate, handle, and service your vehicle, as well as advice on optimum tuning and how to avoid injuries.

Tip

Save this owner's manual on your smartphone, for example, so that you can access it at any time.

An authorized contractual partner will be happy to assist you if you are unsure.

The owner's manual is an important component of the vehicle. If the vehicle is sold, the owner's manual must be downloaded again by the new owner.

The owner's manual can be downloaded multiple times using the QR code or the link on the delivery certificate.

The owner's manual is also available for download from your authorized contractual partner and on the KTM website.

International KTM Website: https://www.ktm.com

A printed copy can be ordered from the following address.

Website for printed copy: https://print.ktm.com

3.1 Manufacturer's warranty, implied warranty

The work prescribed in the service schedule must only be carried out in an authorized contractual partner and confirmed in the **KTM Dealer.net**, as otherwise all warranty claims will be void. Damage or secondary damage caused by tampering with and/or conversions on the vehicle are not covered by the manufacturer's warranty.

3.2 Auxiliary material, operating material

Use operating materials and auxiliary materials in accordance with the operating instructions and specifications.

3.3 Spare parts, accessories

For safety reasons, only spare parts and accessories approved by KTM may be used. They may only be installed by an authorized contractual partner. KTM accepts no liability for other products and any resulting damage or loss.

Certain spare parts and accessory products are specified in parentheses in the descriptions. Authorized contractual partners will be happy to help.

The current **KTM PowerParts** are listed for each vehicle on the KTM website.

International KTM Website: https://www.ktm.com

3.4 Service

A prerequisite for perfect operation and prevention of premature wear is that the service, care, and tuning work is properly carried out as described in the owner's manual. An incorrect suspension setting can lead to damage and breakage of chassis components.

Use of the vehicle under difficult conditions, such as dusty environments, heavy rain, high heat or with a heavy load, can lead to increased wear of components such as the air filter, powertrain, brake systems, or suspension components. For this reason, it may be necessary to inspect or replace components before the next scheduled service interval.

The prescribed running-in times and service intervals must be observed, otherwise the long-term durability of the vehicle will be severely impaired.

The relevant mileage or time interval is whichever occurs first.

3.5 Figures

Some of the figures in this document contain optional extras.

For clarity, some components may be shown disassembled or may not be shown at all. Disassembly is not always absolutely necessary in order to carry out the activities described. The textual information takes precedence.

3.6 Customer service

Authorized contractual partners will be happy to answer questions about the vehicle and KTM.

A list of authorized contractual partners can be found on the KTM website.

International KTM Website: https://www.ktm.com

3.7 Roadside Assistance

For peace of mind when traveling with your vehicle in Europe, we offer Roadside Assistance free of charge in selected countries (handled in cooperation with a contracting partner).

Each service at your authorized contractual partner extends your free Roadside Assistance until the next service or for a maximum of 12 months.

In the event of a breakdown, call the KTM Assistance Center hotline or contact them directly via the KTMconnect app.

The applicable conditions and benefits can be found on the KTM website:

International KTM Website: https://www.ktm.com

4.1 View of vehicle, front left (example)

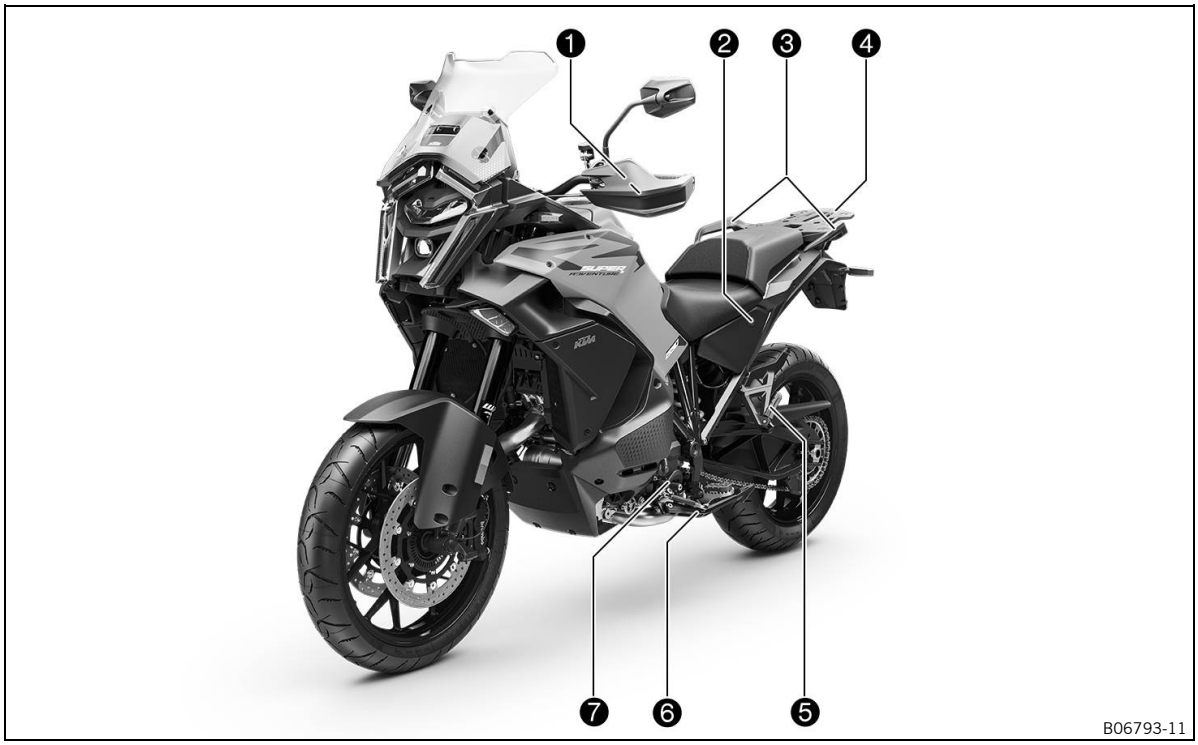

1. Clutch lever (p. 18)
2. Passenger seat unlocking (p. 34)
3. Grab handles (p. 34)
4. Baggage carrier (p. 34)
5. Passenger footpegs (p. 35)
6. Side stand (p. 36)
7. Gear shift lever (p. 35)

4.2 View of vehicle, rear right (example)

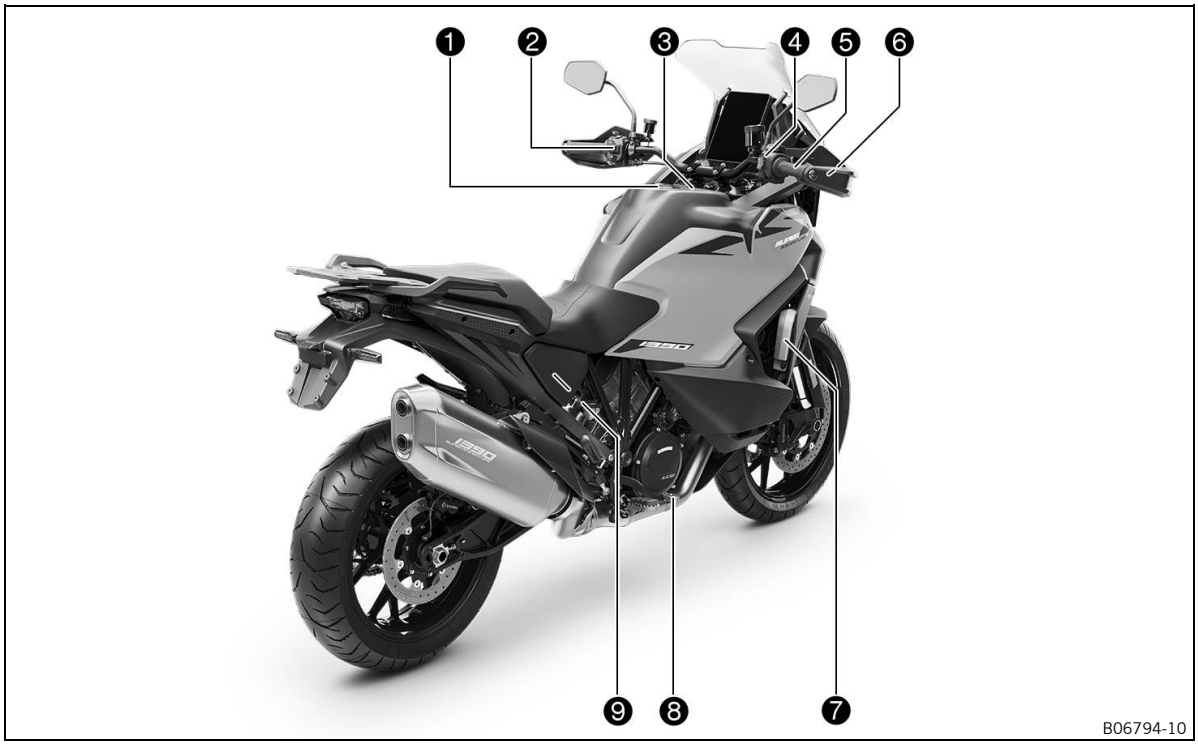

1. Fuel tank cap
2. Combination switch, left (p. 18)
3. Storage compartment
4. Combination switch, right (p. 25)
5. Throttle grip (p. 18)
6. Handbrake lever (p. 18)
7. Cooling system compensating tank
8. Brake pedal (p. 36)
9. Passenger seat emergency release (p. 34)

5 Serial number

5.1 Vehicle identification number

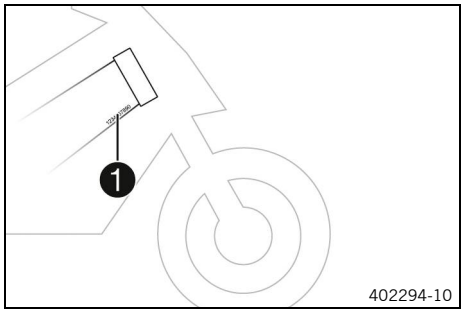

The vehicle identification number ❶ is stamped on the bottom right of the frame behind the steering head.
The vehicle identification number is also shown on the type label.

5.2 Type approval label

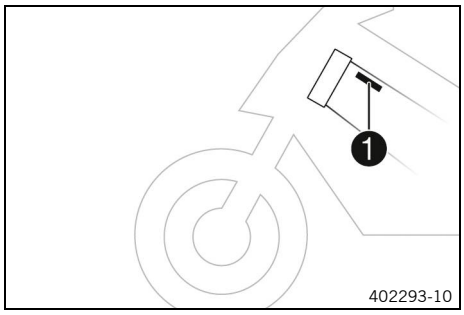

Type label ❶ is affixed to the top left of the frame behind the steering head.

5.3 Engine number

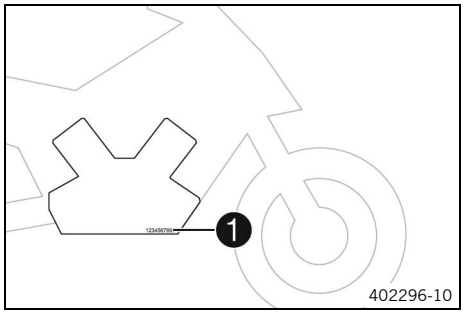

The engine number ❶ is stamped on the right side of the engine.

5.4 Fork part number

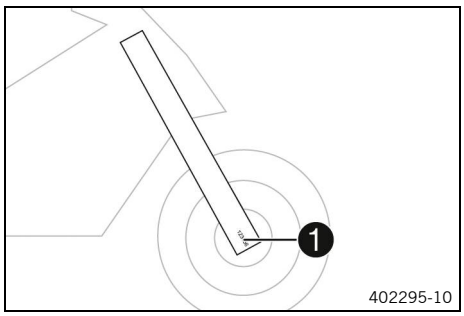

Fork part number ❶ is stamped on the inside of the fork shoe.

5.5 Shock absorber part number

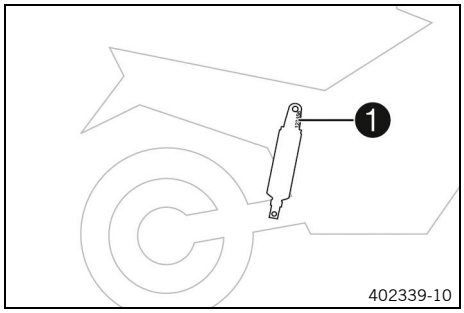

The shock absorber part number ❶ is stamped on the top of the shock absorber.

5.6 Steering damper article number

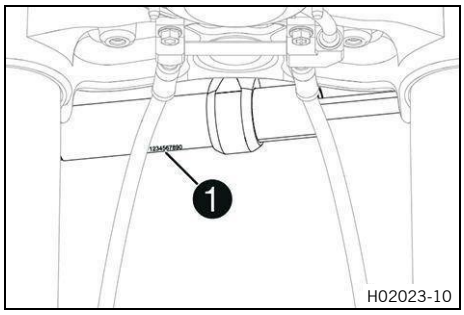

Steering damper article number ❶ is embossed on the underside of the steering damper.

6.1 Clutch lever

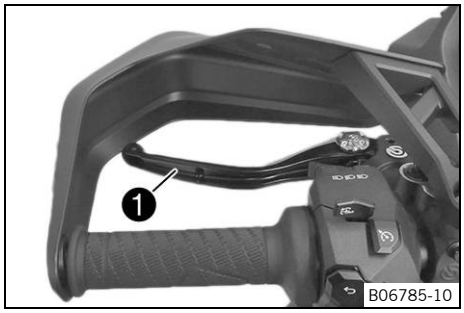

Clutch lever ❶ is fitted on the left side of the handlebar.
The clutch is activated hydraulically and adjusts itself automatically.

6.2 Handbrake lever

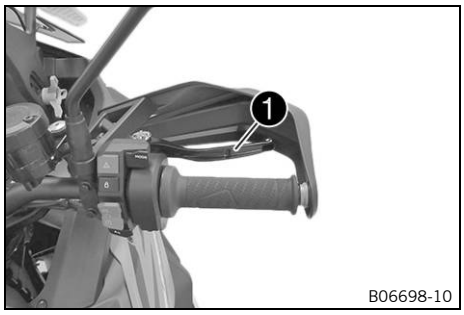

Hand brake lever ❶ is fitted on the right side of the handlebar.
The hand brake lever is used to activate both the front brake and rear brake at the same time.

Note
When the **ABS** mode**Offroad** is switched on, only the front brake is applied.

6.3 Throttle grip

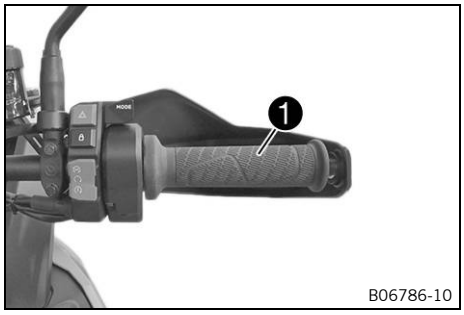

The throttle twist grip ❶ is fitted on the right side of the handlebar.

6.4 Combination switch, left

The left combination switch is fitted on the left side of the handlebar.

Overview of the left combination switch

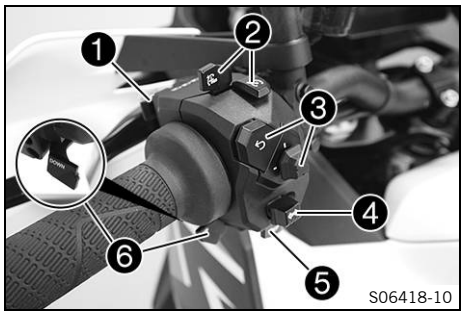

❶ Light switch (p. 19)
❷ Cruise control buttons
❸ Menu buttons (p. 24)
❹ Turn signal switch (p. 24)
❺ Horn button (p. 25)
❻ UP/DOWN button (p. 23)

6.5 Light switch

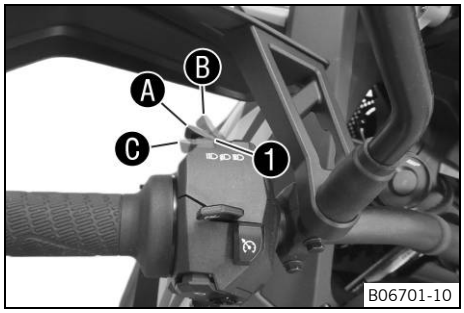

The light switch ❶ is fitted on the combination switch on the left.

Condition		Meaning
	Light switch in position Ⓐ.	In this position, the low beam and the tail light are switched on.
	Light switch in position Ⓑ.	In this position, the high beam and the tail light are switched on.
	Light switch in position Ⓒ.	The headlight flasher is operated in this position.

6.6 Cruise control buttons

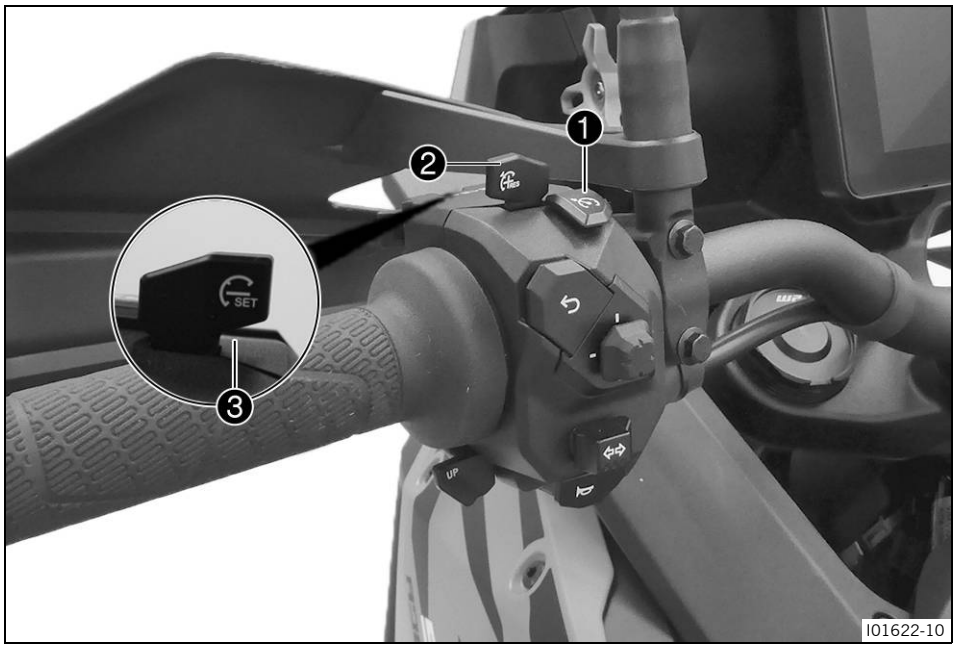

Note
The functions described here apply to models without adaptive cruise control **(ACC)** or with active cruise control mode **CC Only**.

Cruise control buttons ❶, ❷ and ❸ are located on the left side of the combination switch.

Condition	Meaning
Cruise control tip switch ❶ pressed briefly.	Cruise control function is switched on or off. The operating mode is displayed on the combination instrument.
Button **+RES** ❷ pressed briefly.	The cruise control function is activated and the current speed is maintained. The last saved speed is reapplied. Every subsequent brief pressing increases the target speed by 1 km/h or 1 mph.

Condition	Meaning
Button **+RES** ❷ pressed and held.	The target speed is rounded to the next 5 km/h interval. The target speed then increases in increments of 5 km/h or 5 mph.
Button **–SET** ❸ pressed briefly.	The cruise control function is activated and the current speed is maintained. The last saved speed is reapplied. Every subsequent brief press reduces the target speed by 1 km/h or 1 mph.
Button **–SET** ❸ pressed and held.	The target speed is rounded to the previous 5 km/h or 5 mph increment. The target speed then decreases in increments of 5 km/h or 5 mph.

WARNING

Danger of accidents The cruise control system function is not suitable for all riding situations.

The selected cruise speed will not be reached if the engine power is not sufficient for a gradient.

The selected cruise speed will be exceeded if the engine braking effect and the brake power are not sufficient on an incline.

– Do not use the cruise control systems function on winding roads.
– Do not use the cruise control systems on slippery road surfaces (e.g. rain, ice or snow), where there is poor visibility or on unpaved surfaces (e.g. sand, stones or gravel).
– Do not use the cruise control systems function if the traffic does not permit a constant speed.

Functions of cruise control:

- After activating the cruise control function, the throttle grip can be turned back to the basic position. The selected speed will be maintained.
- If no cruise speed has been saved yet, this can be saved using the **–SET** or **+RES** button.
- If the cruise speed is exceeded for less than 30 seconds by turning the throttle grip, the cruise control remains activated.
- If the cruise speed differs from the current speed by more than 10 km/h or 10 mph, e.g. when overtaking, the current speed is stored as the cruise speed by pressing the **–SET** button briefly.
- If there is a sharp incline and the engine braking effect is not sufficient to maintain the set cruise speed, the system brakes actively.
- If the set target speed is significantly below the current speed, the system brakes actively in order to reach the target speed.
- The speed is reduced as the lean angle increases.

The cruise control function is deactivated when one of the following events occurs (switch-off conditions):

- Operating the handbrake lever.
- Operating the rear brake lever.
- Operating the clutch lever for more than 2.5 seconds.
- Closing the throttle beyond the basic position.
- Slip at the rear wheel or the front wheel lifting and thus associated regulation of the motorcycle traction control (**MTC**) for longer than 1 second.
- Control of ABS for more than 1 second.
- A malfunction occurring, which impairs the cruise control system function.
- Exceeding the target speed for more than 30 seconds when overtaking.
- Steep lean angles above 41°.
- Engine speed below 1,500 rpm.
- First gear engaged or transmission in neutral position.
- Motorcycle traction control (**MTC**) is switched off.
- **ABS** mode **Offroad** is activated.

The cruise control can only be activated if the following conditions are met (switching conditions):

- Motorcycle traction control (**MTC**) is activated.
- No strong acceleration.
- No lean angles above 41°.
- 2nd, 3rd, 4th, 5th or 6th gear is engaged.
- Vehicle speed between 30 and 200 km/h or between 20 and 125 mph.
- **ABS** mode **Road** is active.

6.7 Adaptive cruise control buttons (optional)

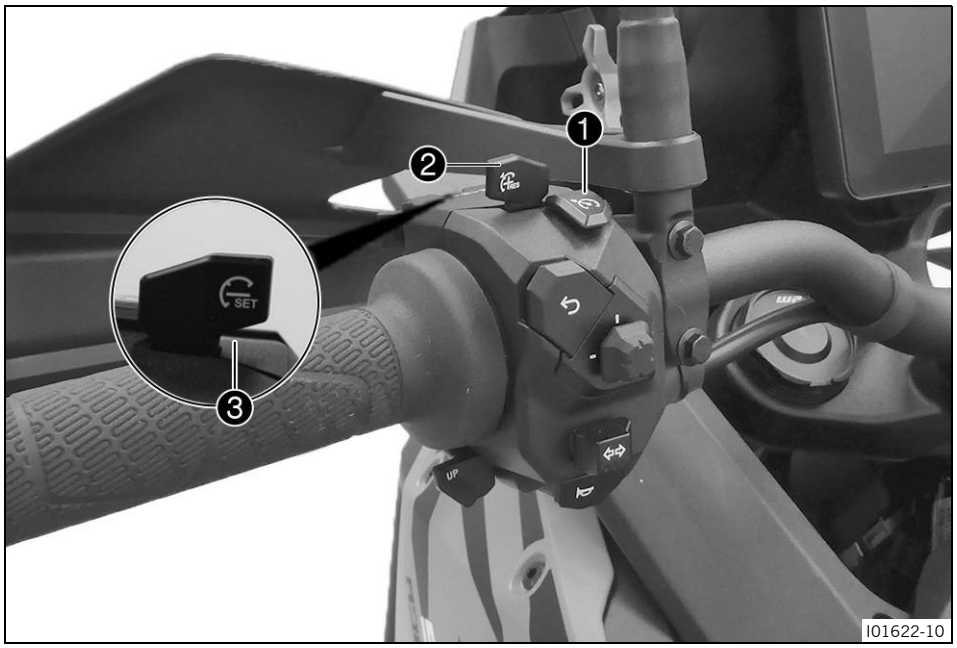

Adaptive cruise control (**ACC**) buttons ❶, ❷ and ❸ are located on the left side of the combination switch.

Condition	Meaning
Cruise control tip switch ❶ pressed briefly.	The adaptive cruise control function (optional) is switched on or off. The operating mode is displayed on the combination instrument.
Button **+RES** ❷ pressed briefly.	The adaptive cruise control function is activated and the current speed is maintained. The last saved speed is reapplied. Every subsequent brief pressing increases the target speed by 1 km/h or 1 mph.
Button **+RES** ❷ pressed and held.	The target speed is rounded to the next 5 km/h interval. The target speed then increases in increments of 5 km/h or 5 mph.
Button **–SET** ❸ pressed briefly.	The adaptive cruise control function is activated and the current speed is maintained. The last saved speed is reapplied. Every subsequent brief press reduces the target speed by 1 km/h or 1 mph.
Button **–SET** ❸ pressed and held.	The target speed is rounded to the previous 5 km/h or 5 mph increment. The target speed then decreases in increments of 5 km/h or 5 mph.

WARNING

Danger of accidents The adaptive cruise control function (ACC) is not suitable for all riding situations.
The rider is always responsible for safe operation of the vehicle.
The ACC is not for avoiding collisions.
The ACC is limited to approx. 50 % of maximum brake power.
No further automatic delay occurs below the minimum speed.
The ACC does not record objects with a high relative speed, e.g. stationary or oncoming vehicles.
The ACC does not record vehicles with a narrow silhouette, e.g. bicycles.
The selected cruise speed will not be reached if the engine power is not sufficient for a gradient.
The selected cruise speed will be exceeded if the engine braking effect and the ACC brake power are not sufficient on an incline.
ACC detects vehicles ahead less well when the vehicle is at a sharp lean angle.

Area of application of the ACC	30 km/h … 180 km/h (18.6 mph … 111.8 mph)

– Always stay attentive and be ready to brake.
– Intervene when ACC fails to detect a vehicle or obstacle, a warning is displayed on the combination instrument or the minimum speed is reached.
– Do not use the ACC on winding roads.
– Do not use the ACC on slippery road surfaces (e.g. rain, ice or snow), where there is poor visibility or on unpaved surfaces (e.g. sand, stones or gravel).
– Do not use the ACC in heavy traffic with other vehicles frequently changing lanes.
– Observe the legal minimum distance to vehicles driving ahead.

Functions of adaptive cruise control (ACC) (optional):

- Adaptive cruise control mode (**ACC**) (optional) and the distance from the vehicle ahead can be set in the **ACC Mode** menu, on the **Splitscreen** or by using the **Paddle Buttons**.
- After activation of the adaptive cruise control function (**ACC**) (optional), the throttle can be turned back to the basic position. The selected speed is maintained, vehicles ahead are detected and the set distance from the vehicle ahead is maintained. The motorcycle accelerates and automatically brakes if necessary.
- If no target speed has been saved yet, this can be saved using the **–SET** or **+RES** button.
- If adaptive cruise control (**ACC**) (optional) detects a vehicle driving ahead and the cruise speed differs by more than 10 km/h from the vehicle driving ahead, briefly pressing the **–SET** button decreases the cruise speed to the speed of the vehicle driving ahead.
- If the cruise speed is exceeded for less than 30 seconds by turning the throttle while not increasing the speed above 180 km/h or 115 mph, the adaptive cruise control (**ACC**) (optional) remains active.
- If the cruise speed differs from the current speed by more than 10 km/h or 10 mph, e.g. when overtaking, the current speed is stored as the cruise speed by pressing the **–SET** button briefly.
- If adaptive cruise control (**ACC**) (optional) detects a vehicle ahead and the cruise speed differs from the speed of the vehicle ahead, in the event of overtaking, acceleration is increased as soon as the turn signal is set to facilitate the overtaking process. If the system does not detect a lane change after setting the turn signal, acceleration is stopped and the set distance to the vehicle in front is restored.
- If there is a sharp incline and the engine braking effect is not sufficient to maintain the set cruise speed, the system brakes actively.
- If the set target speed is significantly below the current speed, the system brakes actively in order to achieve the target speed more quickly.
- In **Comfort** mode, the speed is reduced as the lean angle increases.

The adaptive cruise control (ACC) (optional) is deactivated in the following cases (switch-off conditions):

- Operating the handbrake lever.
- Operating the rear brake lever.
- Operating the clutch lever for more than 2.5 seconds.
- Closing the throttle beyond the basic position.

- Slip at the rear wheel or the front wheel lifting and thus associated regulation of the motorcycle traction control (**MTC**) for longer than 1 second.
- Control of the **ABS** for longer than 1 second.
- Speed above 180 km/h or 115 mph.
- Falling below the minimum speed of 25 km/h or 16 mph in 2nd-4th gear or 35 km/h or 22 mph in 5th-6th gear.
- A malfunction occurring, which impairs the cruise control system function.
- Front radar sensor (optional) is contaminated or is iced up while riding.
- Exceeding the target speed for more than 30 seconds when overtaking.
- Steep lean angles above 41°.
- Engine speed below 1,500 rpm.
- First gear engaged or transmission in neutral position.
- Motorcycle traction control (**MTC**) is switched off.
- **ABS** mode **Offroad** is activated.

The adaptive cruise control (ACC) (optional) can only be activated if the following conditions are met (operating conditions):

- Motorcycle traction control (**MTC**) is activated.
- No strong acceleration.
- No lean angles above 41°.
- Vehicle speed between 30 and 160 km/h or between 20 and 99 mph.
- **ABS** mode **Road** is active.
- Front radar sensor (optional) is clean.

6.8 +RES/-SET button

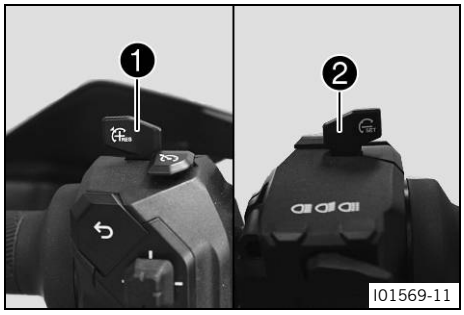

The **+RES** button ❶ is fitted on the top left of the handlebar.
The **-SET**button ❷ is located on the rear of the **+RES** button ❶.

Note
The **+RES** and **–SET** buttons are used to control the cruise control when the cruise control function is activated.
In ride mode **Rally** (optional), the buttons are used to adjust the **Slip Adjuster**.

6.9 UP/DOWN button

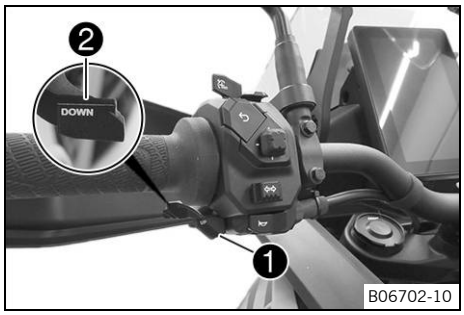

The **UP** button ❶ is fitted on the front left of the handlebar.
The **DOWN** button ❷ is fitted on the rear left of the handlebar.

Note
Buttons **UP** and **DOWN** can be used to set **Slip Adjuster**, **Damping** and **Engine Brake**.

6.10 Menu buttons

The menu buttons are fitted in the middle of the left combination switch.

Overview of menu buttons

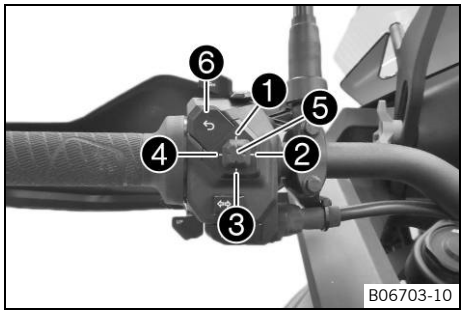

❶ **UP** button
❷ **RIGHT** button
❸ **DOWN** button
❹ **LEFT** button
❺ **SET** button
❻ **BACK** button

6.11 Turn signal switch

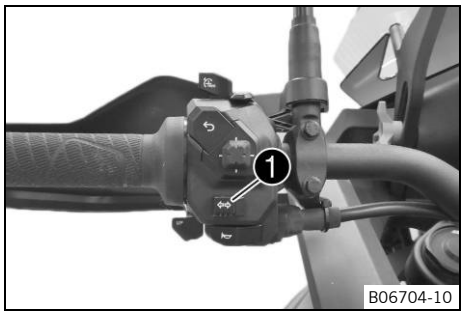

Turn signal switch ❶ is fitted on the combination switch on the left.

Condition		Meaning
⇦	Turn signal switch pressed to the left.	Left turn signal on.
⇨	Turn signal switch pressed to the right.	Right turn signal on.

To switch off the turn signal, press turn signal switch ❶ towards the switch case.

Note

An automatic turn signal switch-off function (**ATIR**) is available as a software feature.

The **ATIR** function uses a time and distance counter.

If the turn signal has been on for at least 10 seconds and 150 meters of riding distance, the turn signal is switched off.

If the vehicle is stationary, both counters are stopped.

If the turn signal switch is reactivated, both counters are reset.

6.12 Horn button

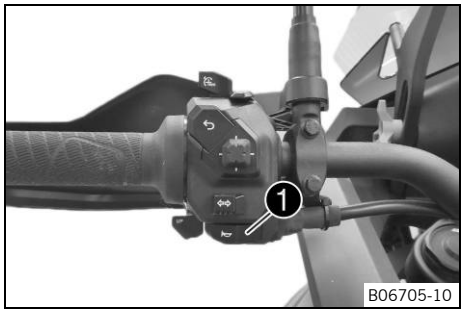

Horn button ❶ is fitted on the left side of the handlebar.

Condition	Meaning
Horn buttons in the basic position	No function
Horn buttons pressed	The horn is operated in this position.

6.13 Combination switch, right

The right combination switch is fitted on the right side of the handlebar.

Overview of the right combination switch

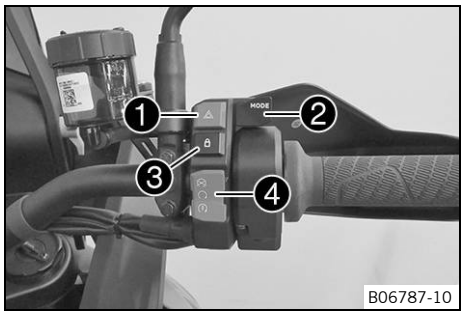

❶ Hazard warning flasher switch (p. 25)
❷ Mode switch (p. 26)
❸ RACE ON button (p. 26)
❹ Start button/kill switch (p. 27)

6.14 Hazard warning flasher switch

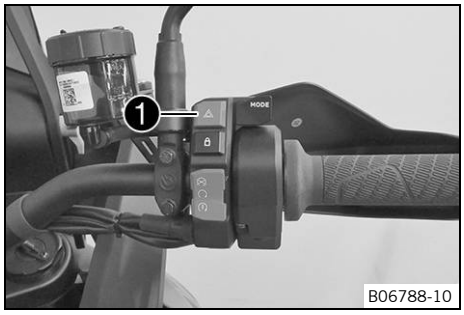

The hazard warning flasher switch ❶ is fitted on the right side of the combination switch.

The hazard warning flasher is used to indicate emergency situations.

Condition	Meaning
Hazard warning flasher switch ⬅➡ not activated.	The hazard blinker is off.
Hazard warning flasher switch ⬅➡ pressed	All four turn signals and the green turn signal indicator lights in the combination instrument flash.

Note

The hazard warning flasher can be activated or deactivated while the ignition is switched on or up to 60 seconds after the ignition is switched off.

Only keep the hazard warning flasher activated as long as necessary as it depletes the 12-V battery.

6.15 Mode switch

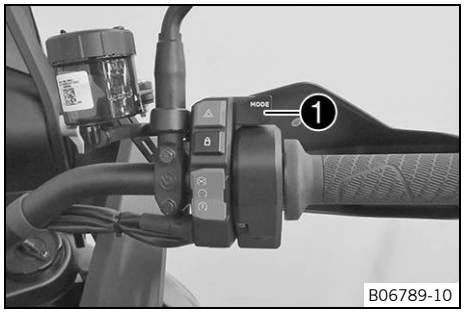

Mode switch ❶ is fitted on the right side of the combination switch.

Note

The mode switch enables quick access to various ride modes.

The individual ride modes are configured in menu **RIDE**.

6.16 RACE ON button

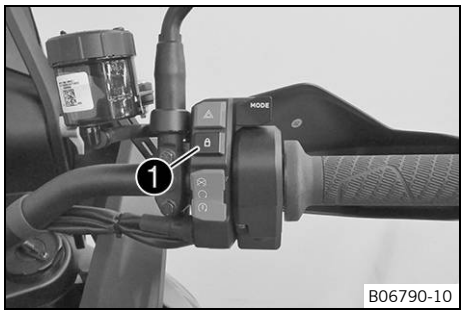

The **RACE ON button** ❶ is fitted on the right side of the combination switch.

Note

The RACE ON button performs the ignition lock function on this vehicle.

The steering can only be locked if the handlebar is turned fully to the left.

Condition	Meaning
RACE ON button – ❶ in the basic position.	The ignition and steering lock remain in their current states.
RACE ON button – ❶ pressed briefly.	Pressing briefly switches the ignition on and deactivates the steering lock or switches the ignition off. The RACE ON indicator bulb lights up once briefly for confirmation.
RACE ON button – ❶ pressed and held.	Pressing and holding switches the ignition off and simultaneously activates the steering lock.

6.17 Start button/kill switch

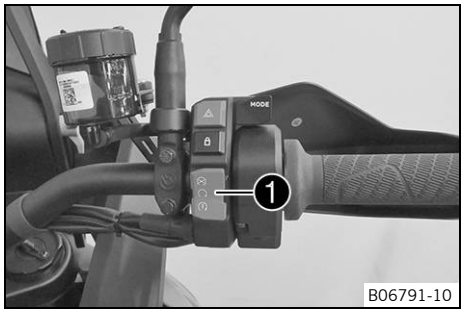

The start button/emergency OFF switch ❶ is fitted on the right side of the combination switch.

Condition		Meaning
	Start button/kill switch off (upper position)	In this position, the ignition circuit is interrupted, a running engine stops, and cannot be started. A message appears on the display.
	Start button/kill switch on (middle position)	This position is required for operation; the ignition circuit is closed.
	Starter motor on (lower position)	In this position, the starter motor is actuated.

Note

Position ⊗ is recommended when several settings are made on the dashboard. This minimizes the discharge of the dashboard battery.

6.18 Steering lock (antenna)

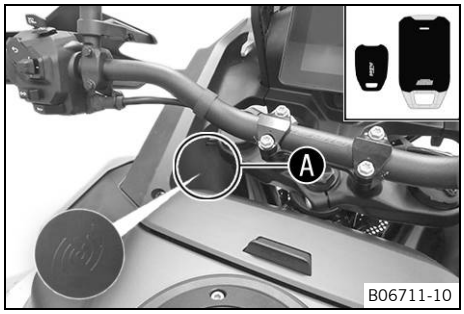

On this vehicle, the ignition and steering lock are replaced by a remote key with transponder (RACE ON key (p. 29)).

In order to activate the steering lock, the handlebar must be turned fully to the left.

The steering is locked and unlocked electromechanically via the RACE ON button (p. 26).

If the battery voltage of the RACE ON key is too low, hold the RACE ON key or the RACE ON chip in area Ⓐ on the motorcycle and try starting again.

Note

As soon as the engine has been started, you can safely stow the RACE ON key or the RACE ON chip again.

Condition	Meaning
Ignition off, steering locked.	In this operating mode, the ignition circuit is interrupted and the steering locked.
Ignition off, steering unlocked.	In this operating mode, the ignition circuit is interrupted and the steering unlocked.
Ignition on, steering unlocked.	In this operating mode, the ignition circuit is closed and the steering unlocked.

6.19 Locking the steering

NOTE

Material damage The vehicle may be damaged if parked incorrectly.

Damage can occur if the vehicle rolls away or falls over.

The components for parking the vehicle are designed only for the weight of the vehicle.

– Park the vehicle on a firm and level surface.
– Make sure that nobody sits on the vehicle when it is parked on a stand.

400732-01

– Move handlebar fully to the left and press and hold RACE ON button (at least 2 seconds).
✓ The steering is locked.

Note

If the steering lock does not engage, move the handlebar slightly.

6.20 Unlocking the steering

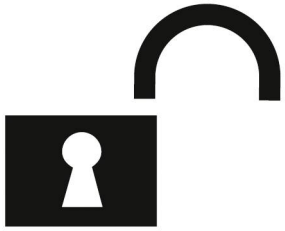

400731-01

– Briefly press RACE ON button .
✓ Ignition on.
✓ The handlebar can now be moved again.

6.21 immobilizer

S06426-10

The electronic immobilizer secures the vehicle against unauthorized use.

The immobilizer is activated and the engine electronics are locked as soon as the ignition is switched off via the RACE ON button (p. 26).

The RACE ON indicator lamp ❶ can indicate malfunctions by flashing.

If the optional alarm system is installed, the RACE ON indicator light ❶ flashes red when the alarm system is switched on.

6.22 RACE ON key

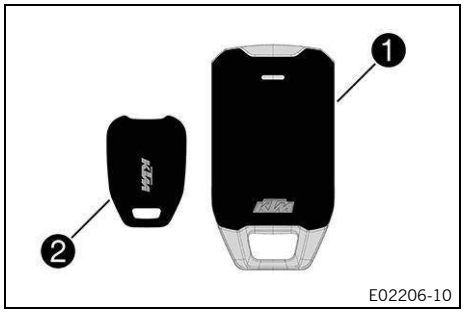

On this vehicle, the **RACE ON key** ❶ performs all the functions of a conventional ignition key.

If the battery voltage of the RACE ON key is too low, the vehicle can be started by holding the RACE ON key directly to the vehicle antenna (p. 27).

The RACE ON chip ❷ is only intended for situations in which the RACE ON key is not available.

Like the RACE ON key, the RACE ON chip can be used to start the vehicle by holding the chip directly to the vehicle antenna (p. 27).

Note

The ignition keys contain electronic components. Always maintain a distance of several centimeters to other devices with electronic components.

A lost ignition key must be deactivated by an authorized contractual partner to prevent unauthorized persons from operating the vehicle.

The ignition keys supplied are activated when delivered.

A total of up to four ignition keys can be activated by an authorized contractual partner.

6.23 anti-relay attack

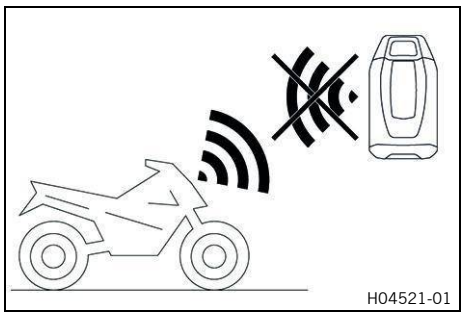

The RACE ON key has the **Anti–Relay–Attack** function that increases security against theft.

The **Anti–Relay–Attack (ARA)** function can be activated or deactivated on the dashboard. If the function is activated, the remote response of the RACE ON key is deactivated five minutes after the ignition is switched off. The dashboard displays whether anti–relay attack in the ignition key has been successfully activated when the ignition is switched off.

Even if the RACE ON key is within range, the vehicle cannot be contactlessly started with the RACE ON key after the period has expired. The same blink code on the combination instrument is displayed as if the RACE ON key were out of range.

This prevents another person from starting the vehicle at an extended range, even though the owner and RACE ON key are not in the vicinity of the vehicle.

Note

If the RACE ON key battery has been replaced, anti-relay attack in the RACE ON key is also deactivated if the **Anti–Relay–Attack** function is activated on the dashboard.

Anti–relay attack in the RACE ON key is not activated again until the next time the ignition is switched off when the RACE ON key is in range.

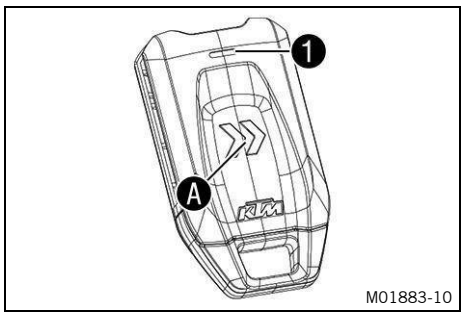

A button is located in the A area of the RACE ON key. When this button is pressed and the 1 LED flashes three times, the RACE ON key's anti–relay attack will be deactivated for 10 minutes, allowing the vehicle's contactless start.

Tip
This function can be used, for example, before the RACE ON key is placed in the rider's motorcycle clothing.

If no vehicle start occurs within this period, the RACE ON key's anti–relay attack is reactivated.

Regardless of anti–relay attack, the vehicle can always be started by holding the RACE ON key or the RACE ON chip directly to the vehicle antenna (p. 27).

Note
In this case, anti-relay attack will not be activated the next time the ignition is switched off.

The vehicle only activates anti–relay attack when the ignition is switched off for one RACE ON key.

It is recommended to carry only one RACE ON key at a time, as it is impossible to predict the RACE ON key on which the anti–relay attack will be activated.

6.24 USB–C port

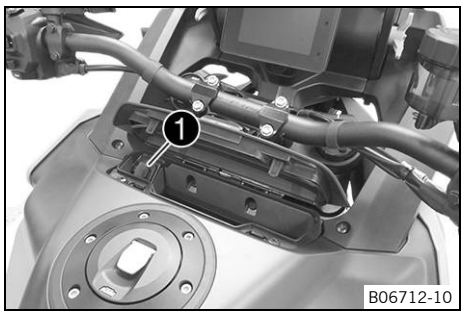

A USB–C port 1 is located in the storage compartment for supplying power to external devices.

The USB–C port is switched on with the ignition.

Note
Use an angled plug for the storage compartment.

USB–C port	
Voltage	5 V
Maximum current consumption	2.1 A

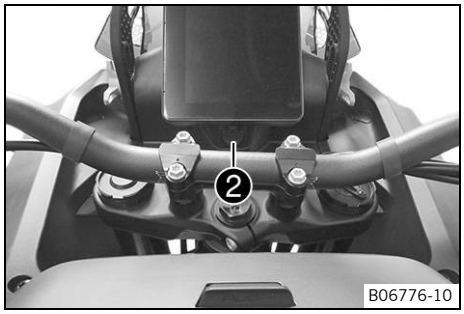

USB–C port 2 for supplying power to external devices is located under the dashboard.

The USB–C port is switched on with the ignition.

USB–C port	
Voltage	5 V
Maximum current consumption	2.1 A

6.25 Opening the fuel tank cap

DANGER

Fire hazard Fuel is highly flammable.

The fuel in the fuel tank expands when warm and can escape if overfilled.

- Do not refuel the vehicle in the vicinity of open flames, glowing, or smoldering objects.
- Make sure that nobody smokes in the vicinity of the vehicle during the refueling process.
- Switch off the engine for refueling.
- Make sure that no fuel is spilled; particularly not on hot parts of the vehicle.
- If any fuel is spilled, wipe it up immediately.
- Do not overfill the fuel tank.

WARNING

Danger of poisoning Fuel is harmful to health.

- Do not allow fuel to come into contact with skin, eyes, or clothing.
- Consult a doctor immediately if fuel has been ingested.
- Do not inhale fuel vapors.
- Rinse the affected area immediately with plenty of water in the event of contact with skin.
- Rinse eyes thoroughly with water and consult a doctor immediately if fuel comes into contact with eyes.
- If fuel spills on to your clothing, change the clothing.
- Store fuel properly in a suitable container and keep out of the reach of children.

NOTE

Environmental hazard Improper handling of fuel is dangerous to the environment.

- Do not allow fuel to enter the groundwater, the soil, or the sewage system.

Condition: Motorcycle is stationary, Engine is off, Ignition is switched on or has been switched off for less than 1 minute

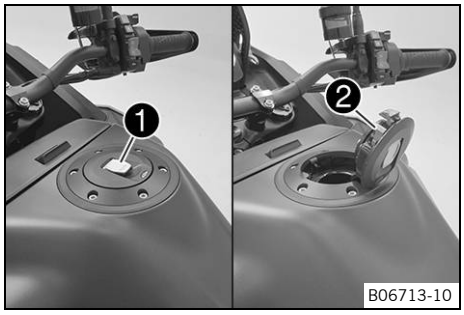

- Fold up cover ❶ slowly.
  ✓ The fuel tank filler cap is unlocked.
- Fold up fuel tank filler cap ❷.

6.26 Closing the fuel tank cap

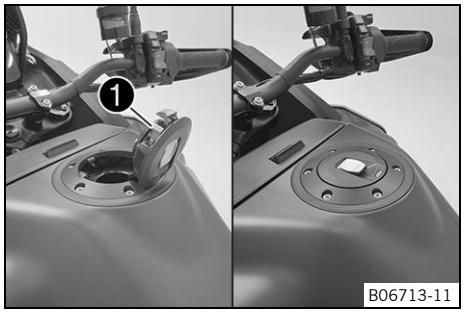

WARNING

Fire hazard Fuel is highly flammable and a health hazard.

- Check that the fuel tank filler cap is locked correctly after closing.
- If fuel spills on to your clothing, change the clothing.
- Rinse the affected area immediately with plenty of water in the event of contact with skin.

– Fold down fuel tank filler cap ❶ and push it down.
  ✓ The fuel tank filler cap locks audibly in place.

6.27 Fuel petcocks

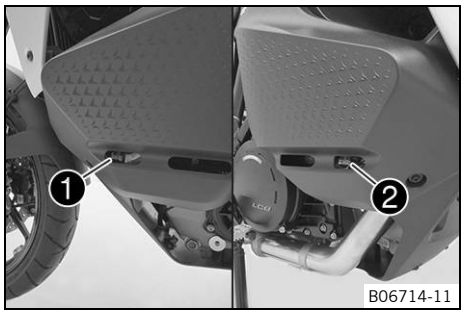

Fuel petcocks ❶ and ❷ are located on the side of the fuel tank.

Note

The fuel petcocks must always be open during operation.
The fuel petcocks are only closed to remove the fuel tank.

Condition	Meaning
Fuel petcocks are closed	Level equalization cannot take place and the fuel supply to the throttle valve body is shut off.
Fuel petcocks are open	Level equalization can take place and the fuel supply to the throttle valve body is open.
One fuel petcock open, one fuel petcock closed	Level equalization cannot take place and the fuel supply to the throttle valve body is open.

6.28 Opening storage compartment

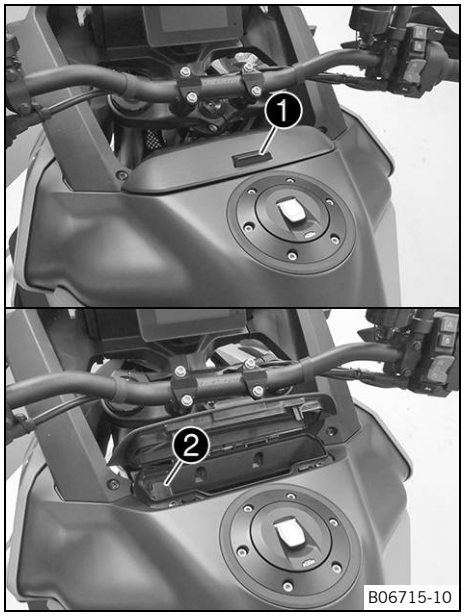

– Move the handlebar to the straight-ahead position.
– Push the ❶ lock forwards.

Note
A USB socket ❷ (p. 30) is located in the storage compartment for supplying power to external devices.

6.29 Closing storage compartment

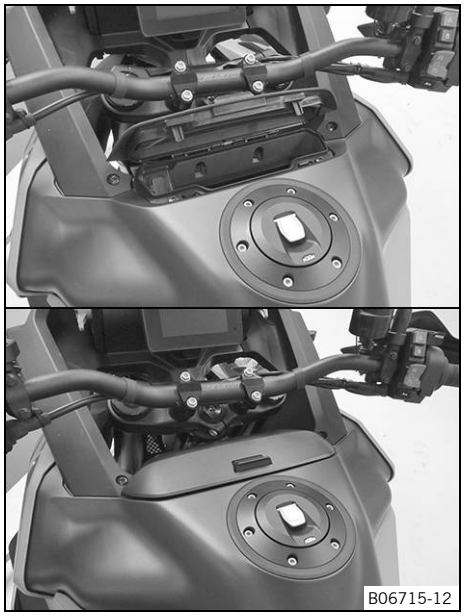

– Push the storage compartment down until the lock engages.

6.30 Passenger seat unlocking

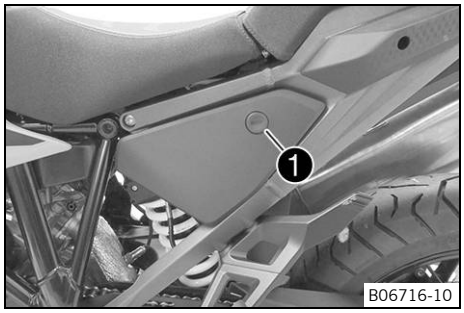

The ❶ tip switch of the passenger seat release is located on the left side of the vehicle below the passenger seat.

The passenger seat release tip switch only functions if the motorcycle is stationary, the engine is switched off and the ignition is switched on or switched off for less than 1 minute.

If the passenger seat release tip switch does not work, the passenger seat can be unlocked using the passenger seat emergency release (p. 34).

6.31 Passenger seat emergency release

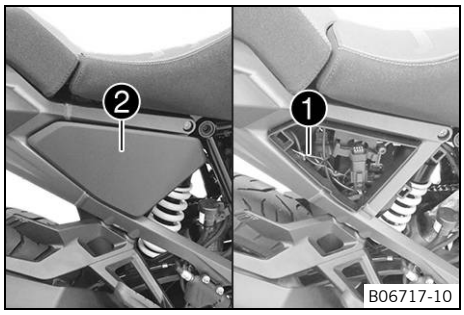

The passenger seat emergency release ❶ is located on the right side of the vehicle below the ❷ cover.

The emergency passenger seat release is used if the seat release tip switch does not work, e.g. because the 12 V battery is discharged.

6.32 Grab handles

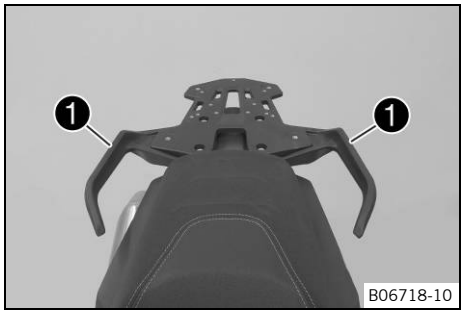

The passenger can hold onto the grab handles ❶ during the trip.

6.33 Baggage carrier

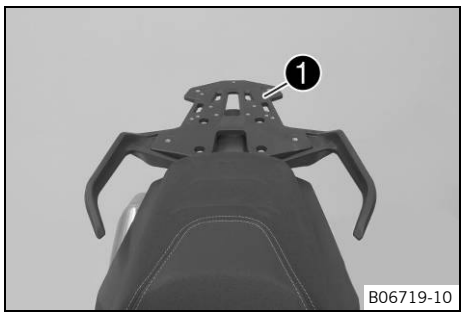

The luggage rack plate ❶ is located behind the seat.

The base plate of a luggage system can be mounted on the luggage rack plate (optional).

The luggage rack plate may not be loaded with more than the specified weight.

Maximum permissible load of luggage rack plate	8 kg (17.6 lb)

Note

Follow the instructions provided by the luggage manufacturer.

6.34 On-board tool kit

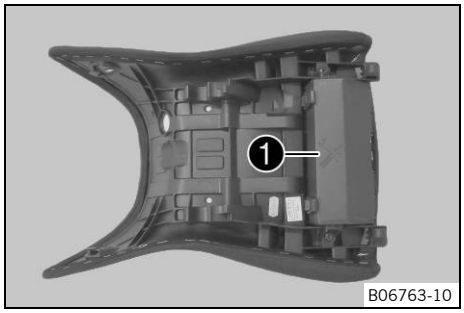

The tool set ❶ is located under the front rider's seat.

6.35 Passenger footpegs

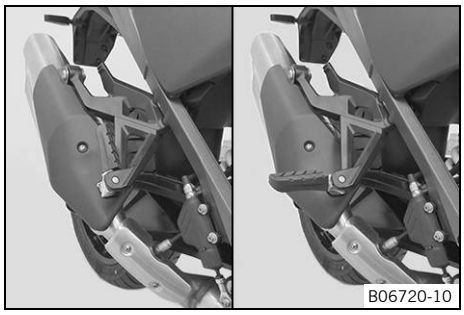

The passenger foot pegs can be folded up and down.

Condition	Meaning
Passenger foot pegs folded up	For operation without a passenger (solo).
Passenger foot pegs folded down	For operation with a passenger.

6.36 Gear shift lever

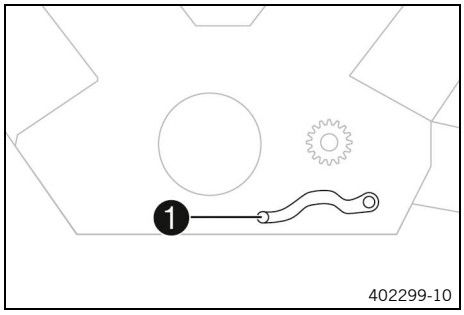

The shift lever ❶ is fitted on the left side of the engine.

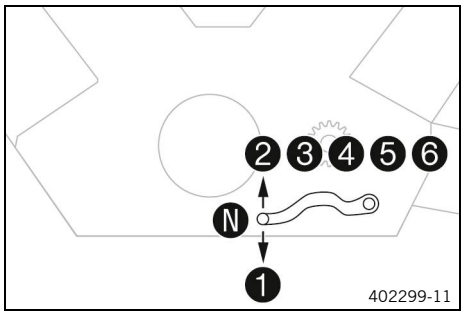

The gear positions can be seen in the figure.
The idle position is between first and second gears.

6.37 Brake pedal

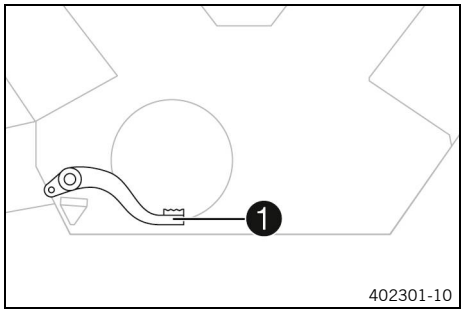

Brake pedal ❶ is located in front of the right footpeg.
The rear brake is operated with the brake pedal.

6.38 Side stand

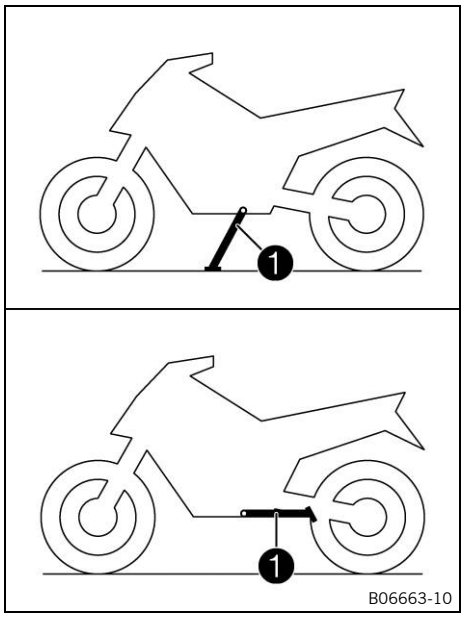

The side stand ❶ is located on the left of the vehicle.
The side stand is used for parking the motorcycle.

Condition	Meaning
Side stand ❶ folded out.	The vehicle can be supported on the side stand. The safety starting system is active.
Side stand ❶ folded in.	This position is mandatory when riding the motorcycle. The safety starting system is inactive.

Note
The side stand must be folded up during motorcycle use.
The side stand is coupled with the safety starting system. See the instructions in the section on “Stopping, parking”.

7.1 dashboard

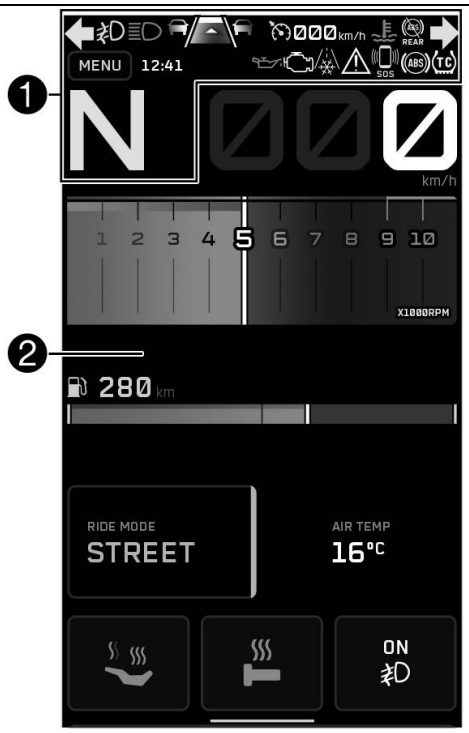

I01694-10

The combination instrument is attached in front of the handlebar.
The combination instrument is divided into two function areas.

❶ indicator lamps (p. 42)

Display ❷

CAUTION

Danger of burns Parts of the combination instrument become hot in certain situations.
The display in particular can heat up considerably at ambient temperatures above 55 °C (131 °F) during long periods of inactivity, e.g. at traffic lights, or in direct sunlight.

– Do not touch the combination instrument with bare hands in the situations referred to.
– Where appropriate protective clothing.
– In the event of burns, rinse the area affected immediately with lukewarm water.

7.2 Touchscreen

I01723-01

The dashboard can be navigated using the controls or the **Touchscreen**.

Note
Operating the **Touchscreen** can lead to distraction and accidents.

The thicker the glove, the worse the **Touchscreen** works.
The **Touchscreen** works in the rain.
The focus of the **Touchscreen** is on active functions.

Note
To avoid scratches, remove dust from the **Touchscreen** and clean it with a microfiber cloth.

7.3 demo mode

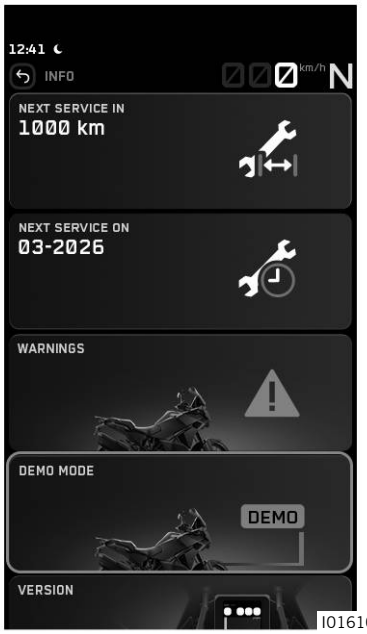

I01610-10

Demo mode is activated in the factory and allows you to test optional software functions.
Once a distance has been covered, demo mode is automatically deactivated as soon as the ignition is turned off.

Distance until demo mode is deactivated	1,500 km (932.1 mi)

Note
Notifications about the remaining distance until the demo mode is deactivated are displayed at regular intervals.
All optional software functions will be deactivated and no longer displayed when demo mode ends. The optional software features are available from authorized dealers.

Functions included in demo mode

- Riding mode **Rally**
- **QUICKSHIFTER+**
- **ETTC**
- **Suspension Pro**
- **Hill Hold Control**
- Engine Brake Control
- Additional ride modes **Custom**

7.4 activation and testing

7.4.1 Activation

I01686-01

The dashboard is switched on with the ignition.

Note
The brightness of the displays is controlled by an ambient light sensor in the combination instrument.

7.4.2 Test

The welcome text appears on the display and the indicator lights are briefly activated for a function check.

Note
The failure indicator light will always light up as long as the engine is not running. If the engine is running and the failure indicator light lights up, stop (taking care not to endanger yourself or other road users in the process) and contact an authorized dealer.

The oil pressure warning light will always light up as long as the engine is not running. If the engine is running and the oil pressure warning light lights up, stop immediately (taking care not to endanger yourself or other road users in the process) and switch off the engine.

The ABS warning light and the TC indicator light light up until a speed of approx. 6 km/h (approx. 4 mph) or faster has been reached.

7.5 warnings

I01695-10

Warnings appear in the lower part of the display; these are marked yellow or red depending on their relevance.

Yellow warnings indicate malfunctions or information which require prompt intervention or an adjustment to the riding style.

I01696-10

Red warnings indicate malfunctions or information which require immediate intervention.

Note

Warnings can be hidden by pressing any button.

All the existing warnings are displayed in the **Warnings** menu until they are no longer active.

7.6 ice warning

I01697-10

The **ice warning** goes on when there is an increased risk of ice on the roads.

The **ice warning** appears in the upper area of the display and is highlighted in yellow.

The **ice warning** appears on the display when the ambient temperature has fallen to or below the specified value.

Temperature	≤ 4 °C (≤ 39.2 °F)

The **ice warning** disappears from the display when the ambient temperature has risen to or above the specified value again.

Temperature	≥ 6 °C (≥ 42.8 °F)

Note

When the **ice warning** lights up, warning **Ice Warning** also appears.

7.7 Warning for rider to take over control (optional)

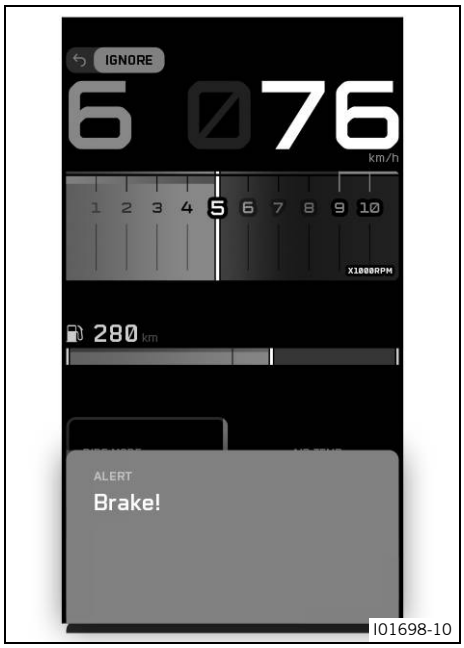

I01698-10

The warning for the rider to take over control **(BRAKE!)** appears in the lower part of the display and is highlighted in red.

The warning appears when the system detects a possible collision.

The warning message also appears when the speed falls below the minimum of 25 km/h (16 mph).

The warning only appears when the adaptive cruise control function is activated and if the system has detected a vehicle ahead.

If the warning appears, immediately take active control of the vehicle.

Note

The system does not warn of objects with a high relative speed, e.g. stationary or oncoming vehicles.

7.8 indicator lamps

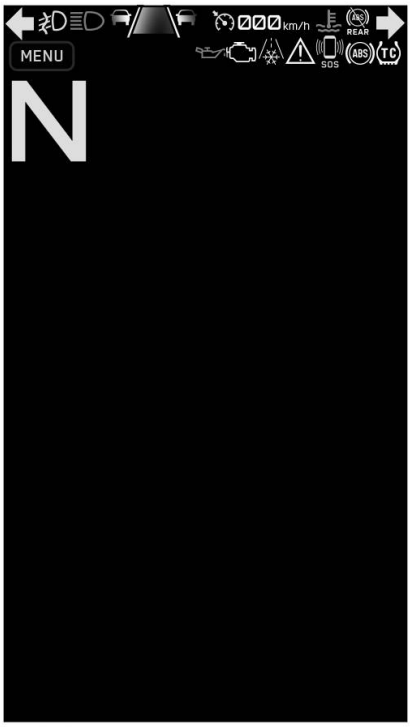

L05192-01

The indicator lamps offer additional information about the operating state of the motorcycle.
When the ignition is switched on, all indicator lamps light up briefly.

Note

The failure indicator light will always light up as long as the engine is not running. If the engine is running and the failure indicator light lights up, stop (taking care not to endanger yourself or other road users in the process) and contact an authorized dealer.

The oil pressure warning light will always light up as long as the engine is not running. If the engine is running and the oil pressure warning light lights up, stop immediately (taking care not to endanger yourself or other road users in the process) and switch off the engine.

The ABS warning light and the TC indicator light light up until a speed of approx. 6 km/h (approx. 4 mph) or faster has been reached.

Condition		Meaning
	KTM RACE ON indicator light lights up/flashes yellow/orange/red.	Status or error messages relating to KTM RACE ON/alarm system.
	The left turn signal indicator light flashes green with a steady rhythm.	The left turn signal is switched on.
	The oil pressure warning light lights up red.	The oil pressure is too low. Stop immediately, taking care not to endanger yourself or other road users in the process, and switch off the engine.
	The general warning light lights up yellow.	A note/warning note on operating safety has been detected. This is also shown in the display.
	The failure indicator light lights up yellow.	The **OBD** has detected a malfunction in the vehicle electronics. Come safely to a halt, and contact an authorized dealer.

Condition		Meaning
	TC indicator light lights up/flashes yellow.	The **MTC** is not active or is currently intervening. The TC indicator lamp also lights up if a malfunction is detected. Contact an authorized contractual partner. The TC indicator lamp flashes, if TC actively engages.
	The cruise control system indicator light lights up yellow.	The cruise control function is switched on in **CC Only** mode, but cruise control is not activated.
	The cruise control system indicator light lights up green.	The cruise control function is switched on in **CC Only** mode and cruise control is activated.
	The ACC cruise control indicator light lights up yellow and vehicle symbol lights up gray.	The Adaptive Cruise Control function is turned on, but cruise control is not activated, and no vehicle ahead has been detected.
	The ACC cruise control indicator light lights up green and vehicle symbol lights up gray.	The Adaptive Cruise Control function is switched on, cruise control is activated, but no vehicle has been detected ahead.
	The ACC cruise control indicator light lights up green and the vehicle symbol lights up green.	The Adaptive Cruise Control function is switched on, cruise control is activated and a vehicle driving has been detected ahead.
	The ACC cruise control indicator light lights up green and the **Group Ride** indicator light lights up green.	The Adaptive Cruise Control function is switched on, cruise control is activated, and a motorcycle has been detected driving ahead.
	Distance control indicator light lights up gray.	The Distance Assist function is switched on, but Distance Assist is not active.
	Distance Assist indicator light lights up green.	The Distance Assist function is switched on, Distance Assist is active and has detected a vehicle.
	Distance Assist indicator light lights up white in different stages.	The distance function is activated.
	Collision warning indicator light lights up red.	The collision warning is active and indicates an impending collision.
	Collision warning indicator light lights up yellow.	The distance warning is active and warns that the distance to the object ahead has fallen below the threshold value.
	Overtake Suppression indicator light lights up red.	Overtake Suppression is active and prevents overtaking maneuvers in the left lane.
	Overtake Suppression indicator light lights up yellow.	Overtake Suppression is active and prevents overtaking maneuvers in the right lane.
	The ABS warning light lights up yellow.	Status or error messages relating to **ABS**.
	Ice warning is active on the display.	The warning lamp lights up when there is increased risk of icy roads.
	The high beam indicator light lights up blue.	The high beam is switched on.
	Fog light indicator light lights up green.	Fog lights (optional) are switched on.
	The right turn signal indicator light flashes green with a steady rhythm.	The right turn signal is switched on.
	Neutral position indicator is active on the display.	The transmission is in the neutral position.

7.9 Display

Note
The figure shows the start screen of the combination instrument. If the menu is open, the speed and the selected gear are still displayed.

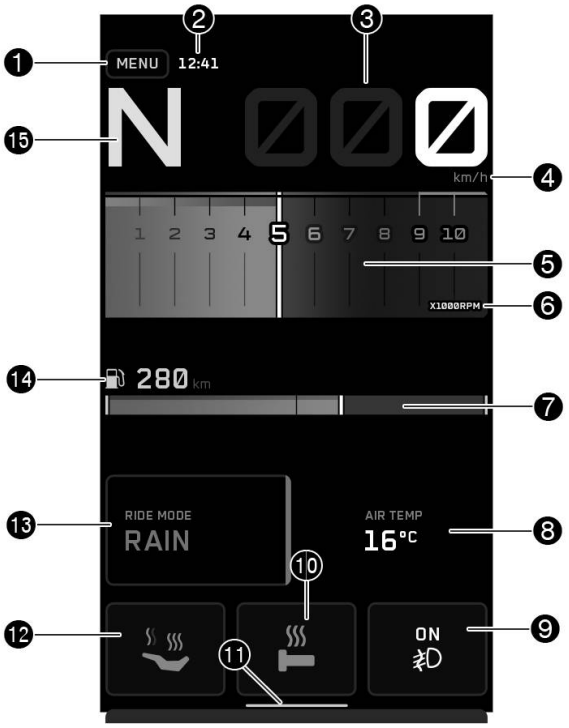

1. Menu button
2. time (p. 51)
3. Speed (p. 48)
4. Unit of speed
5. speed (p. 46)
5. shift light (p. 47)
   The shift light is integrated in the rpm gauge display.
6. Unit for the engine speed display
7. fuel level display (p. 51)
8. ambient air temperature indicator (p. 52)
9. Additional lighting (optional) (p. 53)
10. heated grip (optional) (p. 52)
11. **Splitscreen** display (p. 55)
12. seat heating (optional) (p. 53)
13. Ride mode display (p. 50)
14. Fuel range display
15. Gear display (p. 46)

7.10 Ride mode Rally (optional)

Note
The figure shows the start screen of the combination instrument in active riding mode **Rally**. If the menu is open, the speed and the selected gear are still displayed.

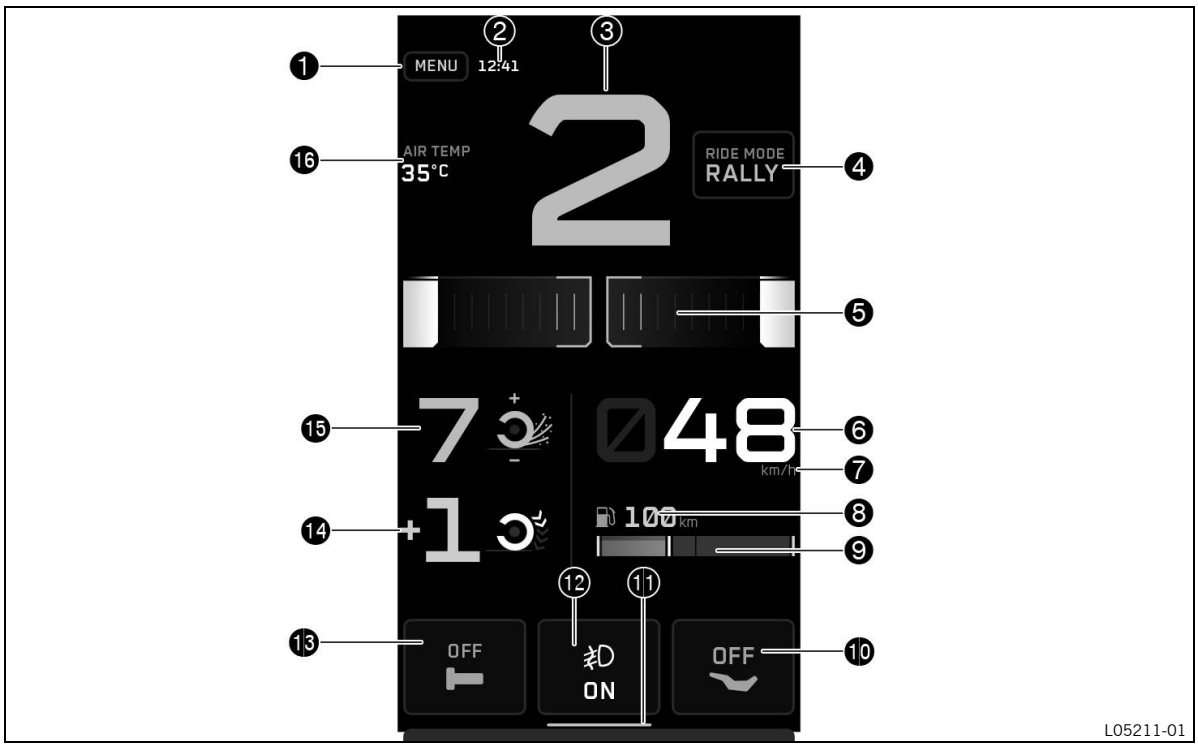

1. Menu button
2. time (p. 51)
3. Gear display (p. 46)
4. Ride mode display (p. 50)
5. speed (p. 46)
5. shift light (p. 47)
   The shift light is integrated in the rpm gauge display.
6. Speed (p. 48)
7. Unit of speed
8. Fuel range display
9. fuel level display (p. 51)
10. seat heating (optional) (p. 53)
11. **Splitscreen** display (p. 55)
12. Additional lighting (optional) (p. 53)
13. heated grip (optional) (p. 52)
14. Engine brake control display
15. **Slip Adjuster** indicator
16. ambient air temperature indicator (p. 52)

7.11 Gear display

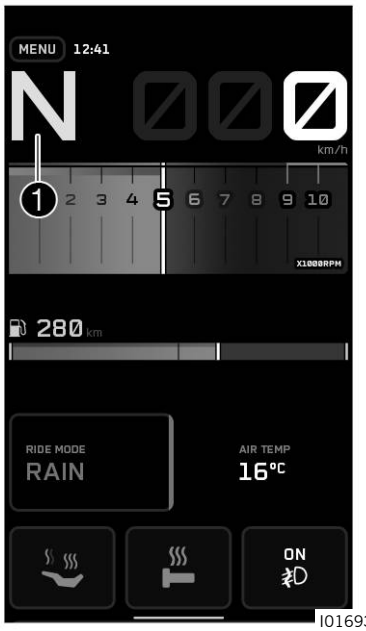

I01693-17

The gear is shown in area ❶ of the display.

7.12 speed

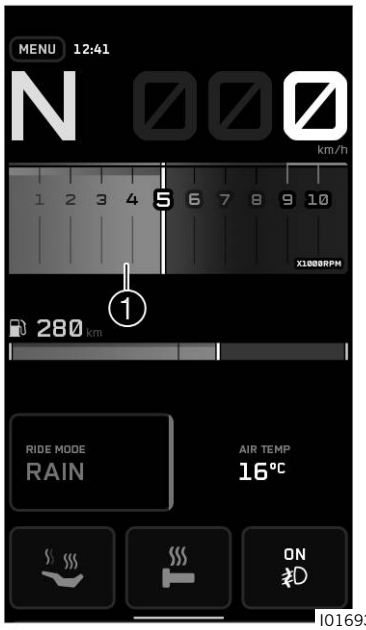

I01693-10

The engine speed is shown in area ❶ of the display.
The engine speed is displayed in revolutions per minute.

7.13 shift light

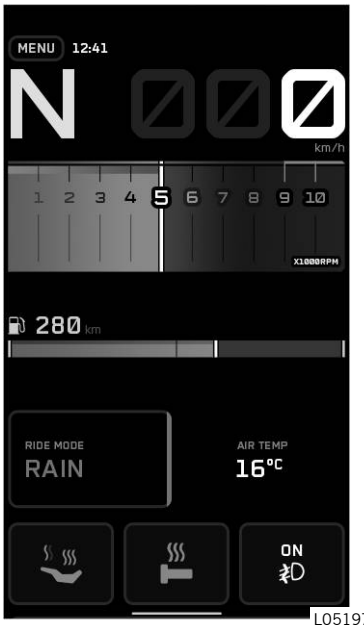

L05197-01

The shift light is integrated in the rpm gauge display.

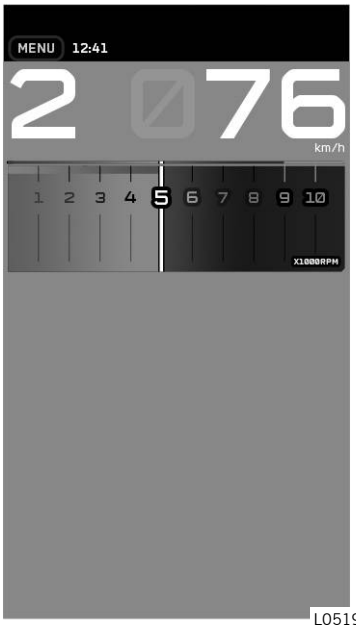

L05198-01

The speed for the shift light can be set in the **Shift Light** menu. The shift warning light is always active during the running-in phase (up to 1,000 km / 621 mi). The shift warning light can only be deactivated, and the values for **RPM1** and **RPM2** can only be adjusted after this. At **RPM1**, the engine speed display flashes red and at **RPM2**, the entire display flashes red.

Note
After the first service, the shift warning light is deactivated when the engine is warm and in sixth-gear.

Coolant temperature	≤ 35 °C (≤ 95.0 °F)
ODO	< 1,000 km (< 621.4 mi)
The shift warning light always lights up at	5,000 rpm (83.33 Hz)

Coolant temperature	> 35 °C (> 95.0 °F)
ODO	> 1,000 km (> 621.4 mi)
RPM1 Engine speed display	flashes red
RPM2 entire display	flashes red

7.14 Speed

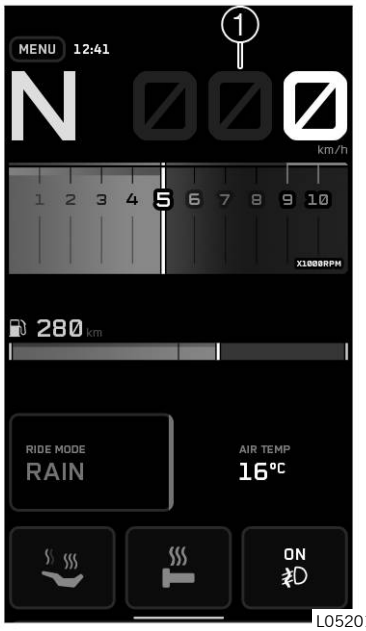

L05201-01

The speed is shown in area ❶ of the display.
The unit of speed can be configured in the **Units** menu.
Speed is shown in kilometers per hour **km/h** or in miles per hour **mph**.

7.15 Cruise control indicator

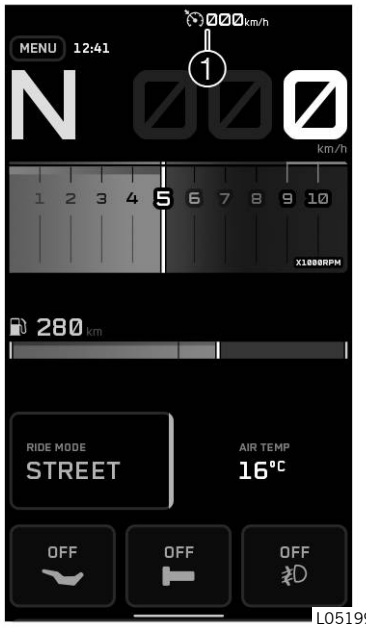

L05199-01

The operating state of the active cruise control is shown in the area ❶ of the display.
Cruise control is operated using the
cruise control buttons (p. 19).

7.16 Adaptive Cruise Control indicator (optional)

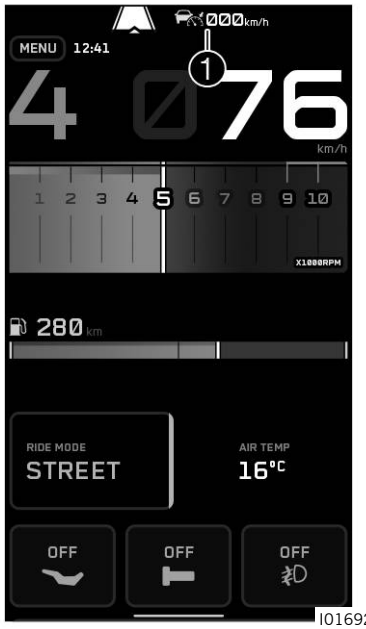

I01692-01

The operating state and the set cruise speed of the activated Adaptive Cruise Control (optional) are shown in area ❶ of the display.

Adaptive Cruise Control (optional) is operated using the Adaptive Cruise Control buttons.

Note

The set time interval to the vehicle ahead is shown by white bars.

The more white bars are displayed, the greater the set time interval for the vehicle ahead.

The time interval to the vehicle ahead can be set in menu **ACC Distance**, on the **ACC Splitscreen**, or with the **Paddle Buttons**.

The activated **ACC** mode is symbolized by a letter to the left of the time interval display or on the **ACC Splitscreen**.

S stands for **ACC** mode **Sport.**

C stands for **ACC** mode **Comfort.**

G stands for **ACC** mode **Group Ride.**

The **ACC** mode can be adjusted in menu **ACC Mode** or on the **ACC Splitscreen**.

In ride mode **Rally** (optional), the **ACC** does not work.

7.17 Distance Assist display (optional)

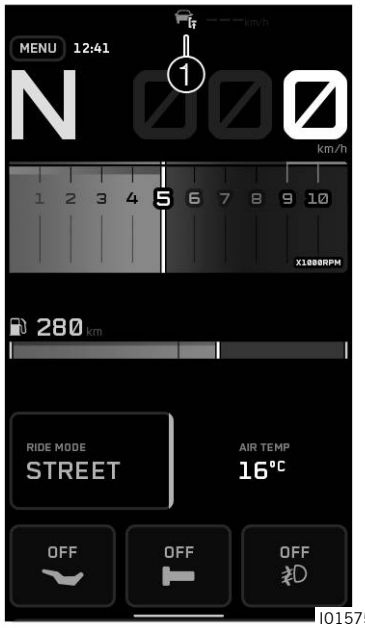

I01575-10

Function of the front radar system (optional), which, when activated, adjusts the engine power, if necessary, triggers braking if the distance to objects or vehicles ahead falls below a specified threshold value.

Distance Assist (optional) maintains a safe distance from the vehicle ahead by limiting the requested torque or increasing the brake pressure.

If there is no response to the intervention of Distance Assist, a minimum distance to the object in front is maintained, depending on the selected ride mode. If the torque requirement changes due to a change in the throttle twist grip position, a slight deviation from the final target distance is permitted.

As soon as the throttle is activated, Distance Assist switches to inactive mode.

Two states can be set.

- Short – provides direct throttle response, a delayed reaction (torque reduction), and a short final target distance.
- Long – provides a more decoupled throttle response, an earlier reaction (torque reduction), and a longer, comfort-oriented final target distance.

Note

Distance Assist (optional) can brake to a standstill.

Distance Assist (optional) is automatically deactivated at speeds above 160 km/h or 99 mph.

The correct gear must be engaged so as not to stall the engine.

Distance Assist (optional) should not be confused with distance warning, which is a separate function that only displays a visual warning to the rider.

Distance Assist (optional) must not be confused with the collision warning, which not only displays a visual warning, but also initiates automatic braking to warn of an impending collision.

Distance Assist (optional) is controlled using the cruise control switches (p. 19).

Distance Assist (optional) is deactivated if a fault occurs in connection with the front radar sensor or the ABS.

7.18 Ride mode display

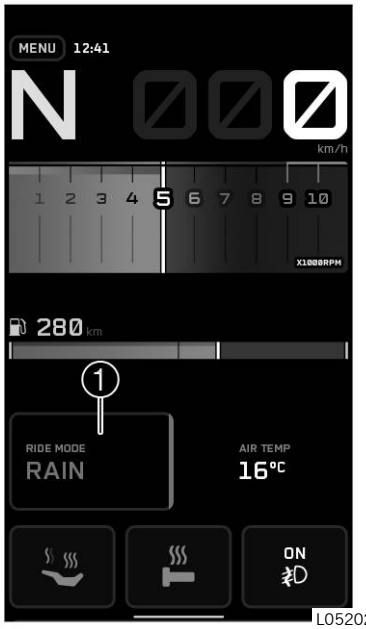

L05202-01

The **Ride Mode** setting is shown in area ❶ of the display.

The riding mode can be configured in the menu **Ride Mode**.

Ways to change Ride Mode:

1. Select **Ride Mode** by pressing the **Ride Mode** button and confirm by holding it.
2. Press the **Ride Mode** button, select **Ride Mode** using the **RIGHT** or **LEFT** button, and confirm with the **SET** button.
3. Via **Touchscreen**.
4. Via the menu.

Note

If a function of the **Ride Mode** is locked, is displayed for that function.

If a function of **Ride Mode** cannot be changed, is displayed for that function and the message “Note: Not all settings have been changed” appears.

7.19 fuel level display

L05206-01

The fuel tank capacity is shown in area ❶ of the display.

The fuel level indicator consists of bars. The more bars are lit, the more fuel is in the fuel tank.

The range is displayed in increments of 5 km or 5 m.

Note

If the fuel level is getting low, the last bar flashes, the fuel symbol turns red and the **Fuel reserve** warning also appears.

The fuel level is displayed with a slight delay to prevent the indicator from constantly moving while riding.

If the combination instrument does not receive a signal from the fuel level sensor, all fuel level display bars will flash.

The fuel range display adjusts over time to reflect average fuel consumption.

To ensure that the fuel gauge works correctly, only refuel when the tank is half empty.

7.20 time

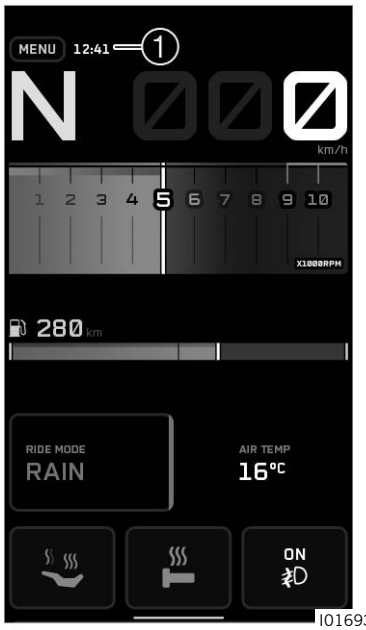

I01693-18

The time is shown in area ❶ of the display.

The time can be displayed in 24-hour format or 12-hour format in all languages.

The format of the time can be configured in sub-menu **Clock Format**.

Note

The time must be reset if the 12 V battery was disconnected from the vehicle or the fuse was removed.

7.21 ambient air temperature indicator

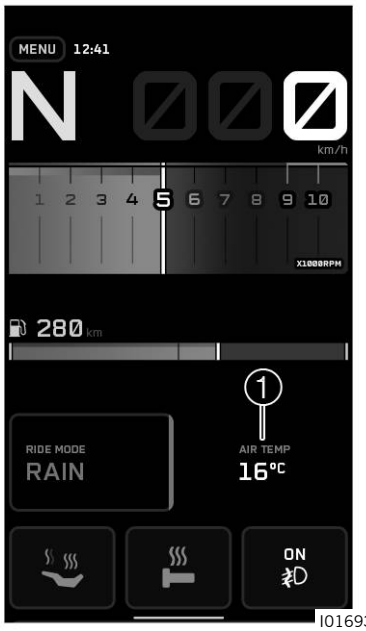

I01693-19

The ambient temperature is shown in area ❶ of the display.
The ambient air temperature is displayed in **°C** or **°F**.
The unit of the ambient air temperature can be configured in the **Temperature** submenu.

7.22 heated grip (optional)

L05203-01

The status of the heated grip is shown in area ❶ of the display.
The grip heater can be configured in menu **Heating** or via the **Touchscreen**.
The button is only available when the grip heater is activated in **Settings**.
If neither the grip nor seat heating is activated, menu **Heating** will not be displayed.

7.23 seat heating (optional)

The status of the seat heating is shown in area ❶ of the display.

The seat heating can be configured in menu **Heating** or via the **Touchscreen**.

The button is only available when the seat heating is activated in **Settings**.

The heated passenger seat is displayed on the dashboard but can only be switched on using the switches on the passenger seat.

If the heated passenger seat is not set to installed in the settings menu, the wavy lines will not be displayed when the rear seat is shown and the passenger will not be able to switch on the heating.

If neither the grip nor seat heating is activated, menu **Heating** will not be displayed.

7.24 Additional lighting (optional)

The status of the additional lighting is shown in area ❶ of the display.

The additional lighting can be configured in menu **Fog Light** or via the **Touchscreen**.

The button is only available when the additional lighting is activated in menu **Fog Light**.

7.25 coolant temperature indicator

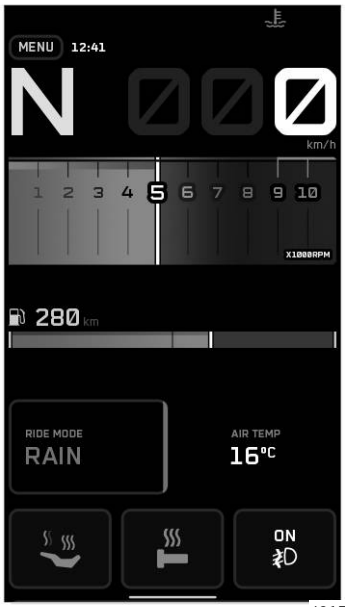

I01724-01

The coolant temperature is displayed by a symbol . The color of symbol changes depending on the temperature. Symbol disappears when the engine has reached operating temperature.

NOTE

Engine failure Overheating damages the engine.

- If the coolant temperature warning is displayed, stop immediately and take care not to endanger yourself or other traffic participants in the process.
- Allow the engine and cooling system to cool down.
- Check and, if necessary, correct the coolant level on the cooling system while it is in a cooled state.

Note

If the coolant temperature gauge lights up red, a warning is displayed.

If the cooling system overheats, the maximum engine speed is limited.

Condition		Meaning
	Coolant temperature gauge lights up blue.	The engine is cold.
	Coolant temperature gauge does not light up.	The engine is at operating temperature.
	Coolant temperature gauge lights up red.	Engine is hot.

7.26 Splitscreen display

I01682-01

The **Splitscreen** display can be opened with the **LEFT**, **UP**, or **RIGHT** button or via **Touchscreen**.

In the **Splitscreen** display, you can use the **LEFT** or **RIGHT** button to switch between the **Favourites** display, the **ACC Splitscreen** display (optional), the audio display, the navigation display, and the telemetry display (optional).

The **Splitscreen** display can be shown in four different sizes.

In the full size (4/4) of the **Splitscreen** of the **ACC** (optional), the four controls – increase distance, decrease distance, **Radar Assistance**, and **ACC Mode** – are displayed.

At 3/4 size of the **Splitscreen**, the controls increase distance, decrease distance, and **Radar Assistance** are displayed.

At 2/4 size of the **Splitscreen**, the controls increase distance and decrease distance are displayed.

At 1/4 size of the **Splitscreen**, no controls are displayed.

In the full size (4/4) of the **Splitscreen** of the favorites, 8 favorites are displayed.

At 3/4 size of the **Splitscreen**, 6 favorites are displayed.

At 2/4 size of the **Splitscreen**, 4 favorites are displayed.

At 1/4 size of the **Splitscreen**, 2 favorites are displayed.

In the full size (4/4) of the **Splitscreen** of the navigation, the map, the route, the speed control, the compass north button, the **Zoom in** button, and the **Zoom out** button are displayed.

At 3/4 size of the **Splitscreen**, the map, the route, the compass north button, the **Zoom in** button, and the **Zoom out** button are displayed.

At 2/4 size of the **Splitscreen**, the map, the route, and the speed control are displayed.

At 1/4 size of the **Splitscreen**, the map, the route, and the speed control are displayed.

In the full size (4/4) of the **Splitscreen** of the music, current song information (album cover, track, and artist), volume, the button to increase volume, the button to decrease volume, and the start/pause button are displayed.

At 3/4 size of the **Splitscreen**, current song information (album cover, track, and artist), volume, the button to increase volume, the button to decrease volume, and the start/pause button are displayed.

At 2/4 size of the **Splitscreen**, current song information (album cover, track, and artist), volume, and the start/pause button are displayed.

At 2/4 size of the **Splitscreen**, current song information (album cover, track, and artist), volume, and the start/pause button are displayed.

In the full size (4/4) of the **Splitscreen** of telemetry (optional), the maximum lean angle, the current lean angle, the current throttle position, the MTC engagement, the current acceleration, and the current deceleration are displayed.

At 3/4 size of the **Splitscreen**, the maximum lean angle, the current lean angle, the current throttle position, the MTC engagement, the current acceleration, and the current deceleration are displayed.

At 2/4 size of the **Splitscreen**, the maximum lean angle, the current lean angle, the current throttle position, the MTC engagement are displayed.

At 1/4 size of the **Splitscreen**, the maximum lean angle and the current lean angle are displayed.

7.27 display Group Riding (optional)

Adaptive Cruise Control ride mode that is specially designed for riding in larger groups of motorcycles. The detection of relevant objects switches from the vehicle directly ahead to the nearest object with a lateral offset. The function focuses on the nearest vehicle with lateral offset, not on the object directly ahead.

The distance to the detected object can be set in 5 stages, ranging from very short to very long.

Note

If group ride detection takes too long, the rider's own vehicle must move slightly closer to the vehicle ahead.

7.28 Distance warning display (optional)

Function that, independently of Adaptive Cruise Control, warns the rider when the distance to the vehicle ahead falls below a certain threshold value.

The function warns of a dangerous situation by lighting up a warning symbol.

Note

Although this is a safety-oriented function, the rider is responsible for the safe operation of the vehicle at all times, and must pay attention to traffic and the surrounding environment.

As the distance warning (optional) is a safety-oriented function, the activation threshold is set so that it does not interfere with a normal or even sporty riding style. It is therefore not recommended to force the activation of the function by performing risky maneuvers or getting too close to other vehicles.

The distance warning (optional) is a completely passive system that has no influence on the riding dynamics of your own vehicle.

The distance warning (optional) only takes into account the distance to an object ahead, but not the approach speed (i.e., the time until collision). The function is not activated when the vehicle approaches stationary or oncoming objects.

The distance warning should not be confused with the collision warning (optional), which not only displays a visual warning but also initiates automatic braking to warn the rider of an impending collision.

The distance warning should not be confused with distance assist (optional), which is a comfort and safety feature that gently intervenes in the ABS and engine control to maintain a safe distance.

The distance warning function (optional) can be turned off in the menu.

The distance warning function (optional) is deactivated if a malfunction occurs in connection with the front radar sensor (optional).

7.29 Overtaking Suppression indicator (optional)

Function of Adaptive Cruise Control that prevents overtaking on the right or left lane.

The system can be deactivated at any time by taking the following measures:

- Manual activation of the brake
- Manual activation of the clutch
- Overturning the throttle twist grip
- Turning off in the menu
- Press the **+RES** button briefly.

Note

After a while, the ACC (optional) detects whether the vehicle is being ridden in right-hand or left-hand traffic and adjusts the Overtake Suppression accordingly.

7.30 display Favourites

L05207-01

Up to eight items of information are shown in the **Favourites** display.

The **Favourites** indicator can be freely configured in the **Favourites** menu.

7.31 Navigation display (optional)

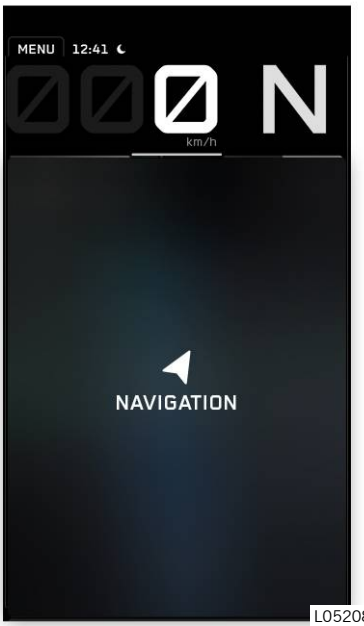

L05208-01

The **Navigation** indicator appears when the navigation function is activated.

The **Navigation** indicator shows the direction arrow, the distance to the next waypoint, the road name, the arrival time as well as the distance to the destination.

7.32 Audio display (optional)

The music display is available on the **Splitscreen**.
The current track is displayed.

Note
With some cell phones, the cell phone audio player needs to be started before playback is possible.

You can change tracks and adjust the volume using the **UP** and **DOWN** buttons or via the **Touchscreen**.

7.33 display Telemetry (optional)

The **Telemetry** display shows, for example, the lean angle, acceleration, and throttle position.

7.34 Call display

L05218-01

WARNING

Danger of accidents Headphone volume which is too high distracts attention from traffic activity.

– Always select headphone volume which is low enough for you to still clearly hear acoustic signals.

The **Call** indicator appears for incoming or active calls.

Press the **UP** or **DOWN** button and confirm with the **SET** button to accept or reject an incoming call or via the **Touchscreen**.

If a call is rejected, the rejection screen remains visible for a moment and then switches back to the previously open view.

When the call is answered, the display switches to the active call view. Use the **UP** or**DOWN** button to navigate between volume up, volume down, mute, and hang up. Press the **SET** button to confirm your selection or use the **Touchscreen**.

The active call view can be minimized using the **BACK** button. Pressing the **BACK** button again returns you to the active call view.

Note

It is not possible to change the audio volume using the combination switch with every cell phone.

The call duration and contact are displayed. Depending on the cell phone settings, the contact is shown by name.

You cannot navigate in the menu during an active phone conversation.

8.1 Menu

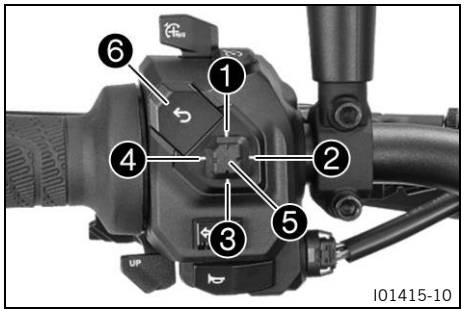

To open the menu, press the **SET** button ❺ on the start screen.

If the **Splitscreen** is open, press and hold the **SET** button ❺.

Use the **UP** button ❶, the **RIGHT** button ❷, the **DOWN** button ❸ and the **LEFT** button ❹ to navigate in the menu.

Press the **BACK** button ❻ to close the current menu or the menu overview.

The menu can also be opened via the **Touchscreen**.

You can also navigate the menu using the **Touchscreen**.

8.2 Open menu

– Press the **SET** button when the menu is closed or use the **Touchscreen**.

Note
If the **Splitscreen** is open, press and hold the **SET** button.

8.3 Ride

– Press the **SET** button when the menu is closed or use the **Touchscreen**.

Note
If the **Splitscreen** is open, press and hold the **SET** button.

– Press the **UP** or **DOWN** button until **RIDE** is highlighted. The menu can be opened by pressing the **SET** button or by using the **Touchscreen**.

In **RIDE**, for example, the ride mode, ABS mode, traction control of the vehicle, chassis, engine braking (optional), **Hill Hold Control**, and cruise control (optional) can be configured.

8.3.1 Ride mode

– Press the **SET** button when the menu is closed or use the **Touchscreen**.

Note
If the **Splitscreen** is open, press and hold the **SET** button.

– Press the **UP** or **DOWN** button until **RIDE** is highlighted. The menu can be opened by pressing the **SET** button or by using the **Touchscreen**.

WARNING
Danger of accidents An incorrectly selected ride mode makes it more difficult to control the vehicle.
The riding modes are each only suitable for certain conditions.
– Always select a riding mode that suits the surface on which you are riding, the weather and the riding situation.

– Press the **UP** or **DOWN** button until **RIDE MODE** is highlighted or use the **Touchscreen**.
– The ride mode can be selected by using the **RIGHT** or **LEFT** button. Press **SET** button to confirm the selection. This changes the coordinated settings of the engine and Motorcycle Traction Control. This can also be performed using **Touchscreen**.
  ✓ **Street** - Homologated performance with balanced response; the Motorcycle Traction Control allows normal slip on the rear wheel.
  ✓ **Rain** - Reduced homologated performance for better ridability; the Motorcycle Traction Control allows less slip on the rear wheel.

- ✓ **Sport** - Homologated performance with very direct response; the Motorcycle Traction Control allows greater slip on the rear wheel.
- ✓ **Offroad** (optional) - Response and Motorcycle Traction Control can be adjusted individually.
- ✓ **Rally** (optional) - Response and Motorcycle Traction Control can be adjusted individually.
- ✓ **Custom 1** - Response and Motorcycle Traction Control can be adjusted individually.
- ✓ **Custom 2** (optional) - Response and Motorcycle Traction Control can be adjusted individually.
- ✓ **Custom 3** (optional) - Response and Motorcycle Traction Control can be adjusted individually.

The ride mode can be configured in submenu **RIDE MODE SET**.

8.3.2 Configure ride mode

– Press the **SET** button when the menu is closed or use the **Touchscreen**.

Note
If the **Splitscreen** is open, press and hold the **SET** button.

– Press the **UP** or **DOWN** button until **RIDE** is highlighted. The menu can be opened by pressing the **SET** button or by using the **Touchscreen**.
– Press the **UP** or **DOWN** button until **RIDE MODE SET** is highlighted. The menu can be opened by pressing the **SET** button or by using the **Touchscreen**.

8.3.2.1 ABS

– Press the **SET** button when the menu is closed or use the **Touchscreen**.

Note
If the **Splitscreen** is open, press and hold the **SET** button.

– Press the **UP** or **DOWN** button until **RIDE** is highlighted. The menu can be opened by pressing the **SET** button or by using the **Touchscreen**.
– Press the **UP** or **DOWN** button until **RIDE MODE SET.** is highlighted. The menu can be opened by pressing the **SET** button or by using the **Touchscreen**.
– Press the **UP** or **DOWN** button until the desired ride mode is highlighted. Open the settings for the desired ride mode by pressing the **SET** button or by using the **Touchscreen**.
– Press the **UP** or **DOWN** button until **ABS** is highlighted or use the **Touchscreen**.

WARNING
Danger of accidents An incorrectly selected ABS mode makes it more difficult to control the vehicle.
The ABS modes are each only suitable for certain conditions.
– Always select an ABS mode that suits the ground and the riding situation.

– Press the **RIGHT** or **LEFT** button to select the desired ABS mode. Press the **SET** button to confirm the selection or use the **Touchscreen**.

Do not open the throttle during the selection.

Note
The ABS mode can be switched during the journey.
When the ABS mode **Road** is active, ABS controls both wheels.
When the **Offroad** ABS mode is active, ABS only controls the front wheel. The rear wheel is no longer controlled by ABS and may lock during braking maneuvers. The indicator lamp **ABS REAR** lights up.
The ABS mode cannot be changed in **Ride Mode Rain** and **Offroad**.

8.3.2.2 MTC

Condition: Cruise control function is deactivated

– Press the **SET** button when the menu is closed or use the **Touchscreen**.

Note
If the **Splitscreen** is open, press and hold the **SET** button.

– Press the **UP** or **DOWN** button until **RIDE** is highlighted. The menu can be opened by pressing the **SET** button or by using the **Touchscreen**.
– Press the **UP** or **DOWN** button until **RIDE MODE SET.** is highlighted. The menu can be opened by pressing the **SET** button or by using the **Touchscreen**.
– Press the **UP** or **DOWN** button until the desired ride mode is highlighted. Open the settings for the desired ride mode by pressing the **SET** button or by using the **Touchscreen**.
– Press the **UP** or **DOWN** button until **MTC** is highlighted or use the **Touchscreen**.
– Press the **RIGHT** or **LEFT** button to switch **MTC** on or off. Press the **SET** button to confirm the selection or use the **Touchscreen**.

Do not open the throttle when switching on or off.
Press the **RIGHT** or **LEFT** button briefly when activating the Motorcycle Traction Control and the motor slip regulation and confirm with the **SET** button.
Press and hold the **RIGHT** or **LEFT** button when switching off the Motorcycle Traction Control and motor slip regulation and confirm with the **SET** button.

Note
The settings are saved automatically and remain active even after the ignition is switched off and on again.

8.3.2.3 MTC+MSR (optional)

Condition: Model with **MTC+MSR**, Cruise control function (optional) is deactivated

– Press the **SET** button when the menu is closed or use the **Touchscreen**.

Note
If the **Splitscreen** is open, press and hold the **SET** button.

– Press the **UP** or **DOWN** button until **RIDE** is highlighted. The menu can be opened by pressing the **SET** button or by using the **Touchscreen**.
– Press the **UP** or **DOWN** button until **RIDE MODE SET.** is highlighted. The menu can be opened by pressing the **SET** button or by using the **Touchscreen**.
– Press the **UP** or **DOWN** button until the desired ride mode is highlighted. Open the settings for the desired ride mode by pressing the **SET** button or by using the **Touchscreen**.
– Press the **UP** or **DOWN** button until **MTC+MSR** is highlighted or use the **Touchscreen**.
– Use the **RIGHT** or **LEFT** button to switch the **MTC+MSR** on or off. Press the **SET** button to confirm the selection or use the **Touchscreen**.

Do not open the throttle when switching on or off.
Press the **RIGHT** or **LEFT** button briefly when activating the Motorcycle Traction Control and the motor slip regulation and confirm with the **SET** button.
Press and hold the **RIGHT** or **LEFT** button when switching off the Motorcycle Traction Control and motor slip regulation and confirm with the **SET** button.

Note
When ABS mode **Offroad** is active, the **MSR** is not active.
The settings are saved automatically and remain active even after the ignition is switched off and on again.

8.3.2.4 Slip Adjuster (optional)

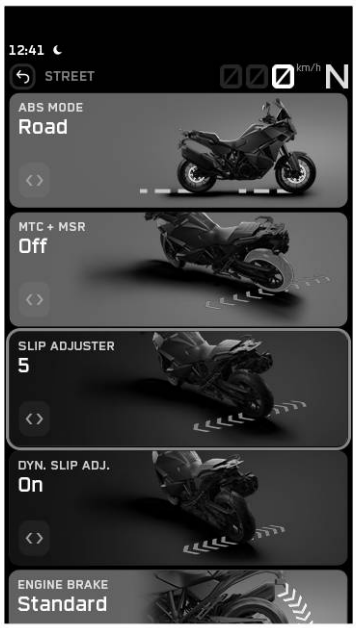

– Press the **SET** button when the menu is closed or use the **Touchscreen**.

Note
If the **Splitscreen** is open, press and hold the **SET** button.

– Press the **UP** or **DOWN** button until **RIDE** is highlighted. The menu can be opened by pressing the **SET** button or by using the **Touchscreen**.
– Press the **UP** or **DOWN** button until **RIDE MODE SET.** is highlighted. The menu can be opened by pressing the **SET** button or by using the **Touchscreen**.
– Press the **UP** or **DOWN** button until the desired ride mode is highlighted. Open the settings for the desired ride mode by pressing the **SET** button or by using the **Touchscreen**.
– Press the **UP** or **DOWN** button until **SLIP ADJUSTER** is highlighted or use the **Touchscreen**.
– Press the **RIGHT** or **LEFT** button to set the maximum permitted slip of the motorcycle traction control. Press the **SET** button to confirm the selection or use the **Touchscreen**.

Do not open the throttle during the selection.

The spin adjuster is a motorcycle traction control function.

The slip adjustment allows the motorcycle traction control to be tuned through nine levels to the desired characteristic map.

Level 0 allows maximum slip on the rear wheel, and level 9 allows the minimum.

If the cruise control function is deactivated, the **Paddle Buttons** or the **+RES** and **-SET** buttons can be used in the main display or in submenu **SLIP ADJUSTER** to set **Slip Adjuster**. When using the **RIGHT** and **LEFT** buttons, the setting must be confirmed with the **SET** button.

Note
Menu **SLIP ADJUSTER** is only available in ride mode **Rally** (optional) or in ride mode **Custom**, which is a copy of ride mode **Rally**.
The spin adjuster is only available when motorcycle traction control is activated.

8.3.2.5 Dynamic Slip Adjuster (optional)

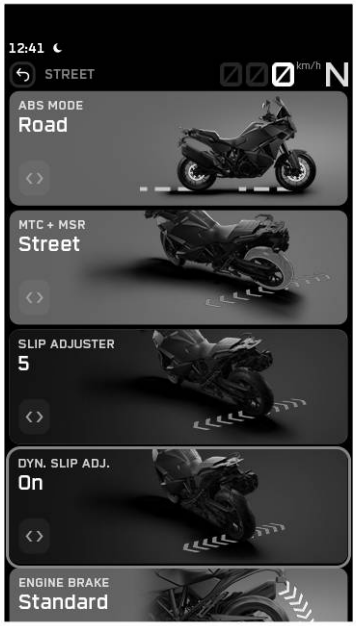

– Press the **SET** button when the menu is closed or use the **Touchscreen**.

Note
If the **Splitscreen** is open, press and hold the **SET** button.

– Press the **UP** or **DOWN** button until **RIDE** is highlighted. The menu can be opened by pressing the **SET** button or by using the **Touchscreen**.
– Press the **UP** or **DOWN** button until **RIDE MODE SET.** is highlighted. The menu can be opened by pressing the **SET** button or by using the **Touchscreen**.
– Press the **UP** or **DOWN** button until the desired ride mode is highlighted. Open the settings for the desired ride mode by pressing the **SET** button or by using the **Touchscreen**.
– Press the **UP** or **DOWN** button until **DYN. SLIP ADJ.** is highlighted or use the **Touchscreen**.

Note
Menu **DYN. SLIP ADJ.** is only available in ride mode **Rally** (optional) or in ride mode **Custom**, which is a copy of ride mode **Rally**.

– Use the **LEFT** or **RIGHT** button to switch **Dynamic Slip Adjuster** on or off. Press the **SET** button to confirm your selection or use **Touchscreen**.

Do not open the throttle during the selection.

The Dynamic Slip Adjuster (optional) is a function of Motorcycle Traction Control.

The dynamic spin adjuster (optional) is only available when motorcycle traction control is activated.

The Dynamic Slip Adjuster (optional) allows for more slip when turning the throttle.

Note
Menu **DYN. SLIP ADJ.** is only available in ride mode **Rally** (optional) or in ride mode **Custom**, which is a copy of ride mode **Rally**.
This function is particularly suitable for riding on loose surfaces such as sand.

8.3.2.6 Engine Brake Control (Optional)

Condition: Ride mode **Rally** (optional) or **Custom** (optional) is activated

– Press the **SET** button when the menu is closed or use the **Touchscreen**.

Note
If the **Splitscreen** is open, press and hold the **SET** button.

– Press the **UP** or **DOWN** button until **RIDE** is highlighted. The menu can be opened by pressing the **SET** button or by using the **Touchscreen**.
– Press the **UP** or **DOWN** button until **RIDE MODE SET.** is highlighted. The menu can be opened by pressing the **SET** button or by using the **Touchscreen**.
– Press the **UP** or **DOWN** button until the desired ride mode is highlighted. Open the settings for the desired ride mode by pressing the **SET** button or by using the **Touchscreen**.
– Press the **UP** or **DOWN** button until **ENGINE BRAKE** is highlighted or use the **Touchscreen**.

Note
Menu **ENGINE BRAKE** is only available in ride mode **Rally** (optional) or in ride mode **Custom**, which is a copy of ride mode **Rally**.

– Press the **RIGHT**- or **LEFT** button to adjust the **Engine Brake**. Press the **SET** button to confirm the selection or use the **Touchscreen**.

Do not open the throttle when adjusting the throttle response.

The engine brake control adjusts the effect of the engine braking when closing the throttle twist grip.

8.3.2.7 Preload adjuster

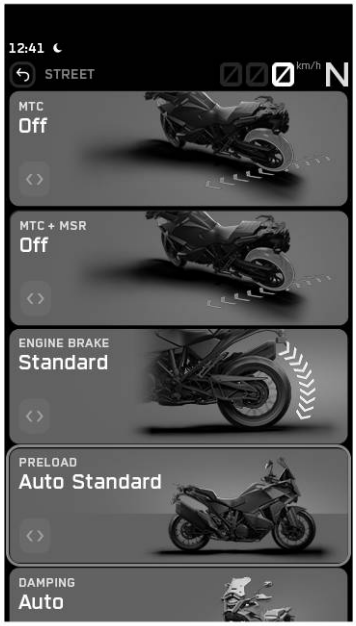

Condition: The rear wheel is under load.

– Press the **SET** button when the menu is closed or use the **Touchscreen**.

Note
If the **Splitscreen** is open, press and hold the **SET** button.

– Press the **UP** or **DOWN** button until **RIDE** is highlighted. The menu can be opened by pressing the **SET** button or by using the **Touchscreen**.
– Press the **UP** or **DOWN** button until **RIDE MODE SET.** is highlighted. The menu can be opened by pressing the **SET** button or by using the **Touchscreen**.
– Press the **UP** or **DOWN** button until the desired ride mode is highlighted. Open the settings for the desired ride mode by pressing the **SET** button or by using the **Touchscreen**.
– Press the **UP** or **DOWN** button until **PRELOAD** is highlighted or use the **Touchscreen**.
– The **Preload Adjuster** can be configured by pressing the **RIGHT**or **LEFT** button. Press the **SET** button to confirm the selection or use the **Touchscreen**.

The spring preload can be adjusted to the load in submenu **PRELOAD**. 21 manual settings (0% to 100%) and 3 automatic settings **Auto low** (optional), **Auto Standard** (optional) and **Auto high** (optional) are available.

The rebound setting is automatically adapted to the payload detected by the system.

Note
Only adjust the preload adjuster when the engine is running.

In automatic settings **Auto low** (optional), **Auto Standard** (optional) and **Auto high** (optional) the spring preload is automatically adjusted to the load detected by the system during the journey.

When stationary, it may not be possible to detect any adjustment of the spring preload.

8.3.2.8 Damping

– Press the **SET** button when the menu is closed or use the **Touchscreen**.

Note
If the **Splitscreen** is open, press and hold the **SET** button.

– Press the **UP** or **DOWN** button until **RIDE** is highlighted. The menu can be opened by pressing the **SET** button or by using the **Touchscreen**.
– Press the **UP** or **DOWN** button until **RIDE MODE SET.** is highlighted. The menu can be opened by pressing the **SET** button or by using the **Touchscreen**.
– Press the **UP** or **DOWN** button until the desired ride mode is highlighted. Open the settings for the desired ride mode by pressing the **SET** button or by using the **Touchscreen**.
– Press the **UP** or **DOWN** button until **DAMPING** is highlighted or use the **Touchscreen**.
– The **RIGHT** can be selected by pressing the **LEFT** or **Damping Mode** button. Press the **SET** button to confirm the selection or use the **Touchscreen**.

Various settings for the damping of the suspension components can be selected in the **DAMPING** menu. The settings **Auto** (optional), **Rain** (optional), **Comfort**, **Street**, **Sport**, **Offroad** (optional), **Pro** (optional) are available.

Note
The damping of the fork and shock absorber is automatically adjusted to the riding style of the rider in **Damping Mode Auto** (optional).
In **Damping Mode Pro**, the damping of the fork and shock absorber can be individually configured in menu **Pro** (optional).

8.3.2.9 Pro Options (optional)

Condition: **Damping Mode Pro** (optional) is activated

– Press the **SET** button when the menu is closed or use the **Touchscreen**.

> **Note**
> If the **Splitscreen** is open, press and hold the **SET** button.

– Press the **UP** or **DOWN** button until **RIDE** is highlighted. The menu can be opened by pressing the **SET** button or by using the **Touchscreen**.
– Press the **UP** or **DOWN** button until **RIDE MODE SET.** is highlighted. The menu can be opened by pressing the **SET** button or by using the **Touchscreen**.
– Press the **UP** or **DOWN** button until the desired ride mode is highlighted. Open the settings for the desired ride mode by pressing the **SET** button or by using the **Touchscreen**.
– Press the **UP** or **DOWN** button until **PRO OPTIONS** is highlighted or use the **Touchscreen**.
  ✓ The sub-menu can be opened by pressing the **SET** button or by using **Touchscreen**.

You can adjust the fork compression damping, fork rebound damping, low speed shock absorber compression damping, high speed shock absorber compression damping and shock absorber compression damping in submenu **PRO OPTIONS**.

8.3.2.10 Fork Compression (optional)

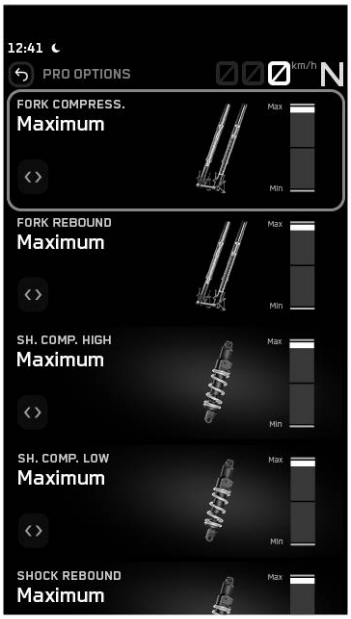

Condition: **Suspension Mode Pro** (optional) is activated

– Press the **SET** button when the menu is closed or use the **Touchscreen**.

> **Note**
> If the **Splitscreen** is open, press and hold the **SET** button.

– Press the **UP** or **DOWN** button until **RIDE** is highlighted. The menu can be opened by pressing the **SET** button or by using the **Touchscreen**.
– Press the **UP** or **DOWN** button until **RIDE MODE SET.** is highlighted. The menu can be opened by pressing the **SET** button or by using the **Touchscreen**.
– Press the **UP** or **DOWN** button until the desired ride mode is highlighted. Open the settings for the desired ride mode by pressing the **SET** button or by using the **Touchscreen**.
– Press the **UP** or **DOWN** button until **PRO OPTIONS** is highlighted. The menu can be opened by pressing the **SET** button or by using the **Touchscreen**.
– Press the **UP** or **DOWN** button until **FORK COMPRESS.** is highlighted or use the **Touchscreen**.
– Press the **RIGHT** or **LEFT** button to set the value for **Fork Compression**. Press the **SET** button to confirm the selection or use the **Touchscreen**.

The fork compression damping can be adjusted in the fork compression damping submenu (optional). 20 settings are possible.

8.3.2.11 Fork Rebound (optional)

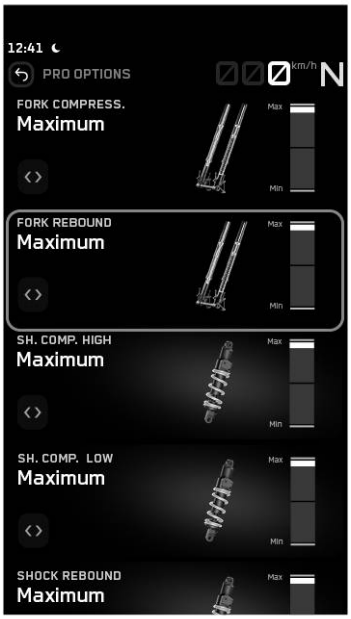

Condition: **Suspension Mode Pro** (optional) is activated

– Press the **SET** button when the menu is closed or use the **Touchscreen**.

> **Note**
> If the **Splitscreen** is open, press and hold the **SET** button.

– Press the **UP** or **DOWN** button until **RIDE** is highlighted. The menu can be opened by pressing the **SET** button or by using the **Touchscreen**.
– Press the **UP** or **DOWN** button until **RIDE MODE SET.** is highlighted. The menu can be opened by pressing the **SET** button or by using the **Touchscreen**.
– Press the **UP** or **DOWN** button until the desired ride mode is highlighted. Open the settings for the desired ride mode by pressing the **SET** button or by using the **Touchscreen**.
– Press the **UP** or **DOWN** button until **PRO OPTIONS** is highlighted. The menu can be opened by pressing the **SET** button or by using the **Touchscreen**.
– Press the **UP** or **DOWN** button until **FORK REBOUND** is highlighted or use the **Touchscreen**.
– Press the **RIGHT** or **LEFT** button to set the value for **Fork Rebound**. Press the **SET** button to confirm the selection or use the **Touchscreen**.

The rebound of the fork can be adjusted in the fork rebound submenu (optional). 20 settings are possible.

8.3.2.12 Shock Compression High (optional)

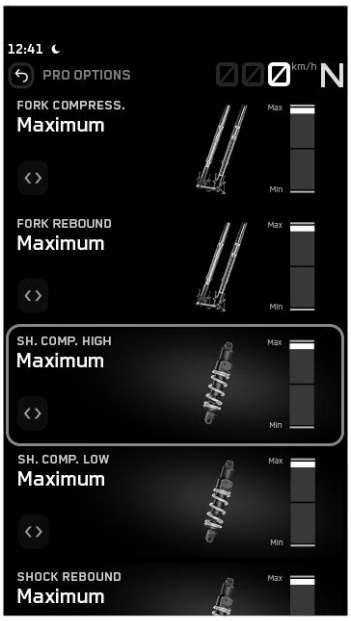

Condition: **Suspension Mode Pro** (optional) is activated

– Press the **SET** button when the menu is closed or use the **Touchscreen**.

> **Note**
> If the **Splitscreen** is open, press and hold the **SET** button.

– Press the **UP** or **DOWN** button until **RIDE** is highlighted. The menu can be opened by pressing the **SET** button or by using the **Touchscreen**.
– Press the **UP** or **DOWN** button until **RIDE MODE SET.** is highlighted. The menu can be opened by pressing the **SET** button or by using the **Touchscreen**.
– Press the **UP** or **DOWN** button until the desired ride mode is highlighted. Open the settings for the desired ride mode by pressing the **SET** button or by using the **Touchscreen**.
– Press the **UP** or **DOWN** button until **PRO OPTIONS** is highlighted. The menu can be opened by pressing the **SET** button or by using the **Touchscreen**.
– Press the **UP** or **DOWN** button until **SH. COMP. HIGH** is highlighted or use the **Touchscreen**.
– Press the **RIGHT** or **LEFT** button to set the value for **Shock Compression High**. Press the **SET** button to confirm the selection or use the **Touchscreen**.

The high speed compression of the shock absorber can be adjusted in the high shock absorber compression damping submenu (optional). 20 settings are possible.

8.3.2.13 Shock Compression Low (optional)

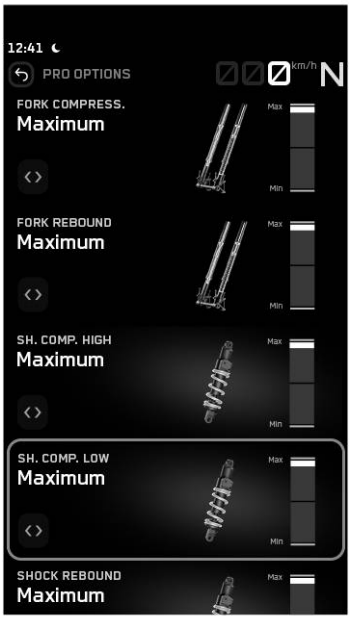

Condition: **Suspension Mode Pro** (optional) is activated

– Press the **SET** button when the menu is closed or use the **Touchscreen**.

> **Note**
> If the **Splitscreen** is open, press and hold the **SET** button.

– Press the **UP** or **DOWN** button until **RIDE** is highlighted. The menu can be opened by pressing the **SET** button or by using the **Touchscreen**.
– Press the **UP** or **DOWN** button until **RIDE MODE SET.** is highlighted. The menu can be opened by pressing the **SET** button or by using the **Touchscreen**.
– Press the **UP** or **DOWN** button until the desired ride mode is highlighted. Open the settings for the desired ride mode by pressing the **SET** button or by using the **Touchscreen**.
– Press the **UP** or **DOWN** button until **PRO OPTIONS** is highlighted. The menu can be opened by pressing the **SET** button or by using the **Touchscreen**.
– Press the **UP** or **DOWN** button until **SH. COMP. LOW** is highlighted or use the **Touchscreen**.
– Press the **RIGHT** or **LEFT** button to set the value for **Shock Compression Low**. Press the **SET** button to confirm the selection or use the **Touchscreen**.

The low speed compression of the shock absorber can be adjusted in the low shock absorber compression damping submenu (optional). 20 settings are possible.

8.3.2.14 Shock Rebound (optional)

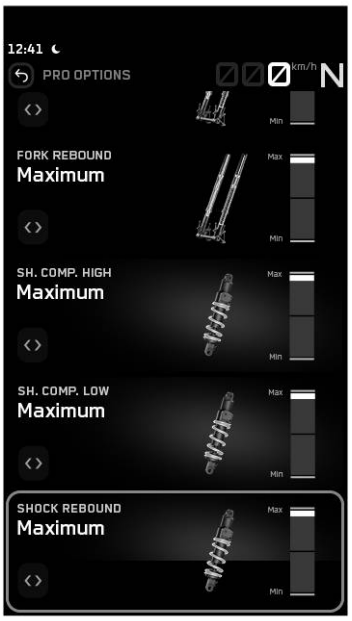

Condition: **Suspension Mode Pro** (optional) is activated

– Press the **SET** button when the menu is closed or use the **Touchscreen**.

> **Note**
> If the **Splitscreen** is open, press and hold the **SET** button.

– Press the **UP** or **DOWN** button until **RIDE** is highlighted. The menu can be opened by pressing the **SET** button or by using the **Touchscreen**.
– Press the **UP** or **DOWN** button until **RIDE MODE SET.** is highlighted. The menu can be opened by pressing the **SET** button or by using the **Touchscreen**.
– Press the **UP** or **DOWN** button until the desired ride mode is highlighted. Open the settings for the desired ride mode by pressing the **SET** button or by using the **Touchscreen**.
– Press the **UP** or **DOWN** button until **PRO OPTIONS** is highlighted. The menu can be opened by pressing the **SET** button or by using the **Touchscreen**.
– Press the **UP** or **DOWN** button until **SHOCK REBOUND** is highlighted or use the **Touchscreen**.
– Press the **RIGHT** or **LEFT** button to set the value for **Shock Rebound**. Press the **SET** button to confirm the selection or use the **Touchscreen**.

The rebound of the shock absorber can be adjusted in the shock absorber rebound submenu (optional). 20 settings are possible.

8.3.2.15 Anti Dive (optional)

– Press the **SET** button when the menu is closed or use the **Touchscreen**.

> **Note**
> If the **Splitscreen** is open, press and hold the **SET** button.

– Press the **UP** or **DOWN** button until **RIDE** is highlighted. The menu can be opened by pressing the **SET** button or by using the **Touchscreen**.
– Press the **UP** or **DOWN** button until **RIDE MODE SET.** is highlighted. The menu can be opened by pressing the **SET** button or by using the **Touchscreen**.
– Press the **UP** or **DOWN** button until the desired ride mode is highlighted. Open the settings for the desired ride mode by pressing the **SET** button or by using the **Touchscreen**.
– Press the **UP** or **DOWN** button until **ANTI DIVE** is highlighted or use the **Touchscreen**.
– Press the **RIGHT** or **LEFT** button to switch **Anti Dive** on or off. Press the **SET** button to confirm the selection or use the **Touchscreen**.

When **Anti Dive** is activated, the damping is automatically adjusted during braking to prevent the fork dipping strongly.

8.3.2.16 Throttle Response (optional)

Condition: Ride mode **Rally** (optional) or **Custom** (optional) is activated

– Press the **SET** button when the menu is closed or use the **Touchscreen**.

> **Note**
> If the **Splitscreen** is open, press and hold the **SET** button.

– Press the **UP** or **DOWN** button until **RIDE** is highlighted. The menu can be opened by pressing the **SET** button or by using the **Touchscreen**.
– Press the **UP** or **DOWN** button until **RIDE MODE SET.** is highlighted. The menu can be opened by pressing the **SET** button or by using the **Touchscreen**.
– Press the **UP** or **DOWN** button until the desired ride mode is highlighted. Open the settings for the desired ride mode by pressing the **SET** button or by using the **Touchscreen**.
– Press the **UP** or **DOWN** button until **THROTTLE RESPONSE** is highlighted. The menu can be opened by pressing the **SET** button or by using the **Touchscreen**.

> **Note**
> Menu **THROTTLE RESPONSE** is only available in ride mode **Rally** (optional) or in ride mode **Custom**, which is a copy of ride mode **Rally**.

– Press the **RIGHT** or **LEFT** button to set the value for **Throttle Response**. Press the **SET** button to confirm the selection or use the **Touchscreen**.

Do not open the throttle when adjusting the throttle response.

✓ Street – balanced response.

✓ Sport – extremely direct response.
✓ Rally – very direct responsiveness.

8.3.2.17 Hill Hold Control (optional)

– Press the **SET** button when the menu is closed or use the **Touchscreen**.

Note
If the **Splitscreen** is open, press and hold the **SET** button.

– Press the **UP** or **DOWN** button until **RIDE** is highlighted. The menu can be opened by pressing the **SET** button or by using the **Touchscreen**.
– Press the **UP** or **DOWN** button until **RIDE MODE SET.** is highlighted. The menu can be opened by pressing the **SET** button or by using the **Touchscreen**.
– Press the **UP** or **DOWN** button until the desired ride mode is highlighted. Open the settings for the desired ride mode by pressing the **SET** button or by using the **Touchscreen**.
– Press the **UP** or **DOWN** button until **HILL HOLD CONTROL** is highlighted or use the **Touchscreen**.
– Press the **RIGHT** or **LEFT** button to switch the Hill Hold Control (p. 138) on or off. Press the **SET** button to confirm the selection or use the **Touchscreen**.

8.3.2.18 QUICKSHIFTER+ (optional)

Condition: Model with QUICKSHIFTER+

– Press the **SET** button when the menu is closed or use the **Touchscreen**.

> **Note**
> If the **Splitscreen** is open, press and hold the **SET** button.

– Press the **UP** or **DOWN** button until **RIDE** is highlighted. The menu can be opened by pressing the **SET** button or by using the **Touchscreen**.
– Press the **UP** or **DOWN** button until **RIDE MODE SET.** is highlighted. The menu can be opened by pressing the **SET** button or by using the **Touchscreen**.
– Press the **UP** or **DOWN** button until the desired ride mode is highlighted. Open the settings for the desired ride mode by pressing the **SET** button or by using the **Touchscreen**.
– Press the **UP** or **DOWN** button until **QUICKSHIFTER+** is highlighted or use the **Touchscreen**.
– Use the **RIGHT** or **LEFT** button to switch QUICKSHIFTER+ on or off. Press the **SET** button to confirm the selection or use the **Touchscreen**.

8.3.2.19 Reset ride mode

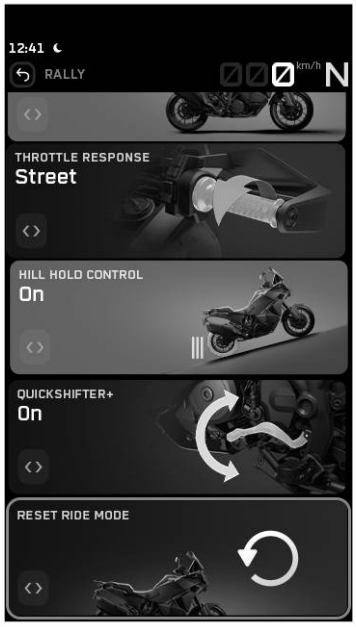

– Press the **SET** button when the menu is closed or use the **Touchscreen**.

> **Note**
> If the **Splitscreen** is open, press and hold the **SET** button.

– Press the **UP** or **DOWN** button until **RIDE** is highlighted. The menu can be opened by pressing the **SET** button or by using the **Touchscreen**.
– Press the **UP** or **DOWN** button until **RIDE MODE SET.** is highlighted. The menu can be opened by pressing the **SET** button or by using the **Touchscreen**.
– Press the **UP** or **DOWN** button until the desired ride mode is highlighted. Open the settings for the desired ride mode by pressing the **SET** button or by using the **Touchscreen**.
– Press the **UP** or **DOWN** button until **RESET RIDE MODE** is highlighted. Press the **SET** button or use **Touchscreen** to reset the ride mode to factory settings.

To delete **Custom Ride Mode**, a **Factory Reset** must be performed.

8.3.3 Fog Light (optional)

– Press the **SET** button when the menu is closed or use the **Touchscreen**.

> **Note**
> If the **Splitscreen** is open, press and hold the **SET** button.

– Press the **UP** or **DOWN** button until **RIDE** is highlighted. The menu can be opened by pressing the **SET** button or by using the **Touchscreen**.
– Press the **UP** or **DOWN** button until **FOG LIGHT** is highlighted or use the **Touchscreen**.
– Press the **RIGHT** or **LEFT** button to switch **Fog Light** on or off. Press the **SET** button to confirm the selection or use the **Touchscreen**.

8.3.4 Radar assistance (optional)

– Press the **SET** button when the menu is closed or use the **Touchscreen**.

> **Note**
> If the **Splitscreen** is open, press and hold the **SET** button.

– Press the **UP** or **DOWN** button until **RIDE** is highlighted. The menu can be opened by pressing the **SET** button or by using the **Touchscreen**.
– Press the **UP** or **DOWN** button until **RADAR ASSISTANCE** is highlighted. The menu can be opened by pressing the **SET** button or by using the **Touchscreen**.

In **RADAR ASSISTANCE**, for example, the Adaptive Cruise Control ride mode (optional), Overtake Suppression (optional), distance warning (optional), and the distance of the Adaptive Cruise Control (optional) can be configured.

8.3.4.1 Radar Functions (optional)

– Press the **SET** button when the menu is closed or use the **Touchscreen**.

Note
If the **Splitscreen** is open, press and hold the **SET** button.

– Press the **UP** or **DOWN** button until **RIDE** is highlighted. The menu can be opened by pressing the **SET** button or by using the **Touchscreen**.
– Press the **UP** or **DOWN** button until **RADAR ASSISTANCE** is highlighted. The menu can be opened by pressing the **SET** button or by using the **Touchscreen**.

WARNING
Danger of accidents The adaptive cruise control function (ACC) is not suitable for all riding situations.
The rider is always responsible for safe operation of the vehicle.
The ACC is not for avoiding collisions.
The ACC is limited to approx. 50 % of maximum brake power.
No further automatic delay occurs below the minimum speed.
The ACC does not record objects with a high relative speed, e.g. stationary or oncoming vehicles.
The ACC does not record vehicles with a narrow silhouette, e.g. bicycles.
The selected cruise speed will not be reached if the engine power is not sufficient for a gradient.
The selected cruise speed will be exceeded if the engine braking effect and the ACC brake power are not sufficient on an incline.
ACC detects vehicles ahead less well when the vehicle is at a sharp lean angle.

Area of application of the ACC	≤ 180 km/h (≤ 111.8 mph)

– Always stay attentive and be ready to brake.
– Intervene when ACC fails to detect a vehicle or obstacle, a warning is displayed on the combination instrument or the minimum speed is reached.
– Do not use the ACC on winding roads.
– Do not use the ACC on slippery road surfaces (e.g. rain, ice or snow), where there is poor visibility or on unpaved surfaces (e.g. sand, stones or gravel).
– Do not use the ACC in heavy traffic with other vehicles frequently changing lanes.
– Observe the legal minimum distance to vehicles driving ahead.

– Press the **UP** or **DOWN** button until **RADAR FUNCTIONS** is highlighted or use the **Touchscreen**.
– Press the **RIGHT** or **LEFT** button to select **Radar Functions**. Pressing the **SET** button or using **Touchscreen** confirms the selec-

tion, thereby changing the coordinated settings of the engine and motorcycle traction control.

In **CC Only** mode, the distance control function of the Adaptive Cruise Control is deactivated. The vehicles ahead are no longer detected and the distance is no longer maintained. The speed is reduced with an increasing lean angle. If the current speed is higher than the cruise speed, e.g., when riding downhill, the system actively brakes to maintain the cruise speed.

In **Distance Assist** mode (optional), the Distance Assist maintains a safe distance from the vehicle ahead by limiting the requested torque or increasing the brake pressure.

In **Adaptive Cruise Control** mode (optional), the distance control function of the Adaptive Cruise Control is activated. Vehicles ahead are detected and the distance is maintained. The speed is reduced with an increasing lean angle. If the current speed is higher than the cruise speed, e.g., when riding downhill, the system actively brakes to maintain the cruise speed.

Distance Assist (optional) and **Adaptive Cruise Control** (optional) are only available in ABS mode **Road**.

The functions can also be adjusted at **Splitscreen**.

8.3.4.2 ACC mode (optional)

– Press the **SET** button when the menu is closed or use the **Touchscreen**.

Note
If the **Splitscreen** is open, press and hold the **SET** button.

– Press the **UP** or **DOWN** button until **RIDE** is highlighted. The menu can be opened by pressing the **SET** button or by using the **Touchscreen**.
– Press the **UP** or **DOWN** button until **RADAR ASSISTANCE** is highlighted. The menu can be opened by pressing the **SET** button or by using the **Touchscreen**.

WARNING

Danger of accidents The adaptive cruise control function (ACC) is not suitable for all riding situations.

The rider is always responsible for safe operation of the vehicle.

The ACC is not for avoiding collisions.

The ACC is limited to approx. 50 % of maximum brake power.

No further automatic delay occurs below the minimum speed.

The ACC does not record objects with a high relative speed, e.g. stationary or oncoming vehicles.

The ACC does not record vehicles with a narrow silhouette, e.g. bicycles.

The selected cruise speed will not be reached if the engine power is not sufficient for a gradient.

The selected cruise speed will be exceeded if the engine braking effect and the ACC brake power are not sufficient on an incline.

ACC detects vehicles ahead less well when the vehicle is at a sharp lean angle.

Area of application of the ACC	≤ 180 km/h (≤ 111.8 mph)

- Always stay attentive and be ready to brake.
- Intervene when ACC fails to detect a vehicle or obstacle, a warning is displayed on the combination instrument or the minimum speed is reached.
- Do not use the ACC on winding roads.
- Do not use the ACC on slippery road surfaces (e.g. rain, ice or snow), where there is poor visibility or on unpaved surfaces (e.g. sand, stones or gravel).
- Do not use the ACC in heavy traffic with other vehicles frequently changing lanes.
- Observe the legal minimum distance to vehicles driving ahead.

- Press the **UP** or **DOWN** button until **ACC MODE** is highlighted or use the **Touchscreen**.
- The cruise control mode can be changed by pressing the **RIGHT** or **LEFT** button. Press the **SET** button to confirm your selection or use **Touchscreen**.

The settings **Comfort** (optional), **Sport** (optional) and **Group Ride** (optional) are available.

In **ACC Comfort** mode (optional), the Adaptive Cruise Control reacts with a focus on comfort, while the maximum acceleration and braking values are lower compared to the **ACC Sport** mode; the speed is also reduced as the lean angle increases.

In **ACC Sport** mode (optional), the Adaptive Cruise Control dynamically reacts, the maximum acceleration and braking values are higher compared to the **ACC Comfort** mode.

The **Group Ride** mode (optional) is specially designed for riding in larger motorcycle groups.

The functions can also be adjusted at **Splitscreen**.

8.3.4.3 Distance of ACC (optional)

Condition: The **Radar Function ACC** (optional) is activated

– Press the **SET** button when the menu is closed or use the **Touchscreen**.

Note
If the **Splitscreen** is open, press and hold the **SET** button.

– Press the **UP** or **DOWN** button until **RIDE** is highlighted. The menu can be opened by pressing the **SET** button or by using the **Touchscreen**.
– Press the **UP** or **DOWN** button until **RADAR ASSISTANCE** is highlighted. The menu can be opened by pressing the **SET** button or by using the **Touchscreen**.

WARNING
Danger of accidents Accident risk increases with a smaller safety distance.
With a smaller preset distance to the vehicle ahead, the adaptive cruise control function (ACC) options are exhausted more quickly.
– Select the greatest possible preset distance to the vehicle ahead to be able to intervene better if necessary.
– Observe the legal minimum distance to vehicles driving ahead.

– Press the **UP** or **DOWN** button until **DISTANCE** (optional) is highlighted, or use **Touchscreen**.
– Press the **RIGHT** or **LEFT** button to set the time interval to the vehicle in front, or use **Touchscreen**.
– Press the **SET** button to confirm your selection or use **Touchscreen**.

Five different time intervals can be selected.

Time interval **Very Short** corresponds to a distance of approximately 1 second to the vehicle in front.

Time interval **Very Long** corresponds to a distance of approximately 2 seconds to the vehicle in front.

Depending on speed, the time distances can vary slightly.

The higher the speed, the greater the distance to the vehicle ahead.

The functions can also be adjusted at **Splitscreen**.

The **Distance** (optional) can also be adjusted with the **Paddle Buttons**.

8.3.4.4 Distance of Distance Assist (optional)

Condition: **Radar Function Distance Assist** (optional) is activated

– Press the **SET** button when the menu is closed or use the **Touchscreen**.

Note
If the **Splitscreen** is open, press and hold the **SET** button.

– Press the **UP** or **DOWN** button until **RIDE** is highlighted. The menu can be opened by pressing the **SET** button or by using the **Touchscreen**.
– Press the **UP** or **DOWN** button until **RADAR ASSISTANCE** is highlighted. The menu can be opened by pressing the **SET** button or by using the **Touchscreen**.

WARNING
Danger of accidents Accident risk increases with a smaller safety distance.
With a smaller preset distance to the vehicle ahead, the adaptive cruise control function (ACC) options are exhausted more quickly.
– Select the greatest possible preset distance to the vehicle ahead to be able to intervene better if necessary.
– Observe the legal minimum distance to vehicles driving ahead.

– Press the **UP** or **DOWN** button until **DISTANCE** is highlighted or use the **Touchscreen**.
– Press the **RIGHT** or **LEFT** button to set the time interval to the vehicle in front, or use **Touchscreen**.
– Press the **SET** button to confirm your selection or use **Touchscreen**.

Two different time intervals are available.

Time interval **Short** corresponds to a distance of approximately 1 second to the vehicle in front.

Time interval **Long** corresponds to a distance of approximately 1.5 seconds to the vehicle in front.

Depending on speed, the time distances can vary slightly.

The higher the speed, the greater the distance to the vehicle ahead.

The functions can also be adjusted at **Splitscreen**.

The **Distance** (optional) can also be adjusted with the **Paddle Buttons**.

8.3.4.5 Overtake Suppression (optional)

– Press the **SET** button when the menu is closed or use the **Touchscreen**.

Note
If the **Splitscreen** is open, press and hold the **SET** button.

– Press the **UP** or **DOWN** button until **RIDE** is highlighted. The menu can be opened by pressing the **SET** button or by using the **Touchscreen**.
– Press the **UP** or **DOWN** button until **RADAR ASSISTANCE** is highlighted. The menu can be opened by pressing the **SET** button or by using the **Touchscreen**.
– Press the **UP** or **DOWN** button until **OVERTAKE SUPRESSION** is highlighted or use the **Touchscreen**.
– Press the **RIGHT** or **LEFT** button to turn Overtake Suppression on or off, or use **Touchscreen**.
– Press the **SET** button to confirm your selection or use **Touchscreen**.

Overtake Suppression (optional) suppresses acceleration of your own vehicle to prevent overtaking in the left or right lane.

Note
After a while, the ACC (optional) detects whether the vehicle is being ridden in right-hand or left-hand traffic and adjusts the Overtake Suppression accordingly.

8.3.4.6 Collision warning (optional)

– Press the **SET** button when the menu is closed or use the **Touchscreen**.

Note
If the **Splitscreen** is open, press and hold the **SET** button.

– Press the **UP** or **DOWN** button until **RIDE** is highlighted. The menu can be opened by pressing the **SET** button or by using the **Touchscreen**.
– Press the **UP** or **DOWN** button until **RADAR ASSISTANCE** is highlighted. The menu can be opened by pressing the **SET** button or by using the **Touchscreen**.

WARNING
Danger of accidents Electronic driving aids can only influence the vehicle within the limits of its physical capabilities.
– Even when using electronic driving aids, always adapt your riding style to the road conditions, the traffic situation and your own ability.

– Press the **UP** or **DOWN** button until **COLLISION WARNING** is highlighted or use the **Touchscreen**.
– Press the **RIGHT** or **LEFT** button to turn **Collision Warning** on or off, or use **Touchscreen**.
– Press the **SET** button to confirm your selection or use **Touchscreen**.

The collision warning (optional) alerts the rider to a dangerous situation ahead by means of a brief double brake pulse, and a brake warning also lights up on the display.

The function is not an autonomous emergency braking function. It is only a last-minute warning.

Since the collision warning is a safety feature, the activation threshold is set so that it does not interfere with a normal or even sporty riding style. It is therefore not recommended to force the function to activate by performing risky maneuvers or rapid approaches.

The brake pressure is not applied to the maximum limit.

The working range is limited at high angles of inclination.

The function is not a collision avoidance function; it does not brake for people, animals, crossing vehicles, or other obstacles.

The function is not activated when stationary or oncoming objects are approaching.

The collision warning (optional) is deactivated if a malfunction occurs in connection with the front radar sensor or the ABS.

8.3.4.7 Brake assist (optional)

– Press the **SET** button when the menu is closed or use the **Touchscreen**.

Note
If the **Splitscreen** is open, press and hold the **SET** button.

– Press the **UP** or **DOWN** button until **RIDE** is highlighted. The menu can be opened by pressing the **SET** button or by using the **Touchscreen**.
– Press the **UP** or **DOWN** button until **RADAR ASSISTANCE** is highlighted. The menu can be opened by pressing the **SET** button or by using the **Touchscreen**.

WARNING
Danger of accidents Electronic driving aids can only influence the vehicle within the limits of its physical capabilities.
– Even when using electronic driving aids, always adapt your riding style to the road conditions, the traffic situation and your own ability.

– Press the **UP** or **DOWN** button until **BRAKE ASSIST** is highlighted or use the **Touchscreen**.
– Press the **RIGHT** or **LEFT** button to turn Brake Assist on or off, or use **Touchscreen**.
– Press the **SET** button to confirm your selection or use **Touchscreen**.

The Brake Assist function (optional) is designed to support riders in emergency situations by increasing the brake pressure applied.

Note
The function is not an autonomous emergency braking function. Manual activation of the brake is always required to trigger the system.

A virtual collision time is calculated. If this collision time falls below a defined threshold value, the function is activated. If the

rider applies the brake in such a case, the function increases the brake pressure to achieve the desired deceleration of the vehicle.

The brake lever may feel “weak” during active Brake Assist (optional) intervention due to the activation of the pump motor.

As Brake Assist (optional) is a safety feature, the activation threshold is set so that it does not interfere with a normal or even sporty riding style. It is therefore not recommended to force the function to activate by performing risky maneuvers or rapid approaches.

Brake Assist (optional) is limited to approximately 70–75% of the maximum brake power.

The function is not a collision avoidance function; it does not brake for people, animals, crossing vehicles, or other obstacles.

The function is not activated when stationary or oncoming objects are approaching.

The brake assist function (optional) is deactivated if a malfunction occurs in connection with the front radar sensor or the ABS.

8.3.4.8 Distance warning (optional)

– Press the **SET** button when the menu is closed or use the **Touchscreen**.

Note
If the **Splitscreen** is open, press and hold the **SET** button.

– Press the **UP** or **DOWN** button until **RIDE** is highlighted. The menu can be opened by pressing the **SET** button or by using the **Touchscreen**.
– Press the **UP** or **DOWN** button until **RADAR ASSISTANCE** is highlighted. The menu can be opened by pressing the **SET** button or by using the **Touchscreen**.
– Press the **UP** or **DOWN** button until **DISTANCE WARNING** is highlighted or use the **Touchscreen**.
– Press the **RIGHT** or **LEFT** button to turn **Distance Warning** on or off, or use **Touchscreen**.
– Press the **SET** button to confirm your selection or use **Touchscreen**.

The distance warning (optional) is a purely passive system that warns when the distance to the vehicle ahead is too short.

8.4 info

– Press the **SET** button when the menu is closed or use the **Touchscreen**.

Note
If the **Splitscreen** is open, press and hold the **SET** button.

– Press the **UP** or **DOWN** button until **Info** is highlighted. The menu can be opened by pressing the **SET** button or by using the **Touchscreen**.

In **INFO**, for example, general information, trip and warnings that may be present can be called up.

8.4.1 Trip info

– Press the **SET** button when the menu is closed or use the **Touchscreen**.

Note
If the **Splitscreen** is open, press and hold the **SET** button.

– Press the **UP** or **DOWN** button until **INFO** is highlighted. The menu can be opened by pressing the **SET** button or by using the **Touchscreen**.
– Press the **UP** or **DOWN** button until **TRIP INFO** is highlighted. The menu can be opened by pressing the **SET** button or by using the **Touchscreen**.

General information on the distance traveled, trip time, average fuel consumption, and average speed can be accessed in menu **TRIP INFO**.

Up to 8 trip counters can be displayed.

8.4.1.1 trip

– Press the **SET** button when the menu is closed or use the **Touchscreen**.

Note
If the **Splitscreen** is open, press and hold the **SET** button.

– Press the **UP** or **DOWN** button until **Info** is highlighted. The menu can be opened by pressing the **SET** button or by using the **Touchscreen**.
– Press the **UP** or **DOWN** button until **TRIP INFO** is highlighted. The menu can be opened by pressing the **SET** button or by using the **Touchscreen**.
– Press the **UP** or **DOWN** button until **TRIP** is highlighted or use the **Touchscreen**.

8.4.1.2 Add trip

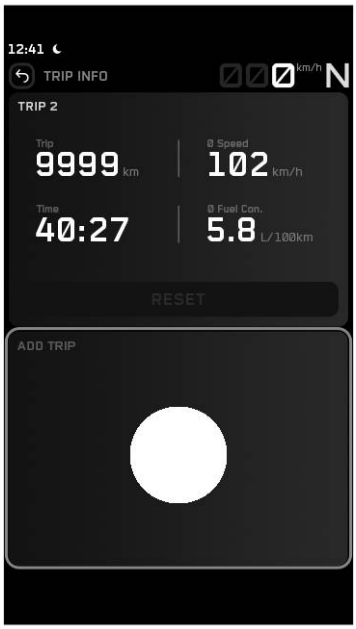

– Press the **SET** button when the menu is closed or use the **Touchscreen**.

Note
If the **Splitscreen** is open, press and hold the **SET** button.

– Press the **UP** or **DOWN** button until **Info** is highlighted. The menu can be opened by pressing the **SET** button or by using the **Touchscreen**.
– Press the **UP** or **DOWN** button until **TRIP INFO** is highlighted. The menu can be opened by pressing the **SET** button or by using the **Touchscreen**.
– Press the **UP** or **DOWN** button until **ADD TRIP** is highlighted. Press the **SET** button to add a new **Trip** or use **Touchscreen**.

Note
Up to 8 separate trip counters are possible.

8.4.1.3 Reset trip

– Press the **SET** button when the menu is closed or use the **Touchscreen**.

Note
If the **Splitscreen** is open, press and hold the **SET** button.

– Press the **UP** or **DOWN** button until **Info** is highlighted. The menu can be opened by pressing the **SET** button or by using the **Touchscreen**.
– Press the **UP** or **DOWN** button until **TRIP INFO** is highlighted. The menu can be opened by pressing the **SET** button or by using the **Touchscreen**.
– Press the **LEFT** or **RIGHT** button until **RESET** is highlighted. Press the **SET** button or use **Touchscreen** to reset the selected **Trip**.

Note
Each trip counter can be reset separately.

8.4.1.4 Delete trip

– Press the **SET** button when the menu is closed or use the **Touchscreen**.

Note
If the **Splitscreen** is open, press and hold the **SET** button.

– Press the **UP** or **DOWN** button until **Info** is highlighted. The menu can be opened by pressing the **SET** button or by using the **Touchscreen**.
– Press the **UP** or **DOWN** button until **TRIP INFO** is highlighted. The menu can be opened by pressing the **SET** button or by using the **Touchscreen**.
– Press the **LEFT** or **RIGHT** button until **DELETE** is highlighted. Press the **SET** button to delete **Trip** or use **Touchscreen**.

Note
Trip 3 to **Trip 8** can be deleted.

8.4.2 info

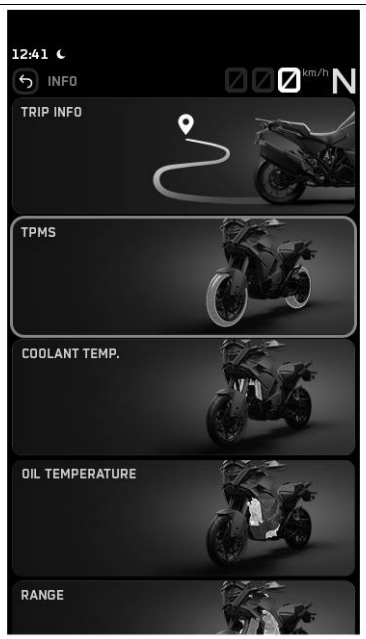

– Press the **SET** button when the menu is closed or use the **Touchscreen**.

Note
If the **Splitscreen** is open, press and hold the **SET** button.

– Press the **UP** or **DOWN** button until **INFO** is highlighted. The menu can be opened by pressing the **SET** button or by using the **Touchscreen**.
– Press the **UP** or **DOWN** button until the desired information is highlighted, or use **Touchscreen**.

TPMS FR displays the current tire air pressure of the front tire.

TPMS RE displays the current tire air pressure of the rear tire.

Note
The tire pressure monitoring system display mode can be set in menu **TPMS WARNINGS**.

COOLANT TEMP. displays the coolant temperature.

OIL TEMPERATURE displays the engine oil temperature.

RANGE indicates the possible fuel range you can cover with the fuel reserve.

BATTERY VOLTAGE displays the battery voltage.

ODOMETER displays the total mileage.

WARNINGS displays warnings that have occurred until they are no longer active.

VERSION displays the version of the dashboard.

NEXT SERVICE IN displays when the next service is due.

NEXT SERVICE ON displays when the next service is due.

8.4.3 E-SIM

– Press the **SET** button when the menu is closed or use the **Touchscreen**.

Note
If the **Splitscreen** is open, press and hold the **SET** button.

– Press the **UP** or **DOWN** button until **INFO** is highlighted. The menu can be opened by pressing the **SET** button or by using the **Touchscreen**.
– Press the **UP** or **DOWN** button until **E-SIM** is highlighted or use the **Touchscreen**.

E-SIM shows the status of the **E-SIM**.

8.4.4 Mobile

– Press the **SET** button when the menu is closed or use the **Touchscreen**.

> **Note**
> If the **Splitscreen** is open, press and hold the **SET** button.

– Press the **UP** or **DOWN** button until **INFO** is highlighted. The menu can be opened by pressing the **SET** button or by using the **Touchscreen**.
– Press the **UP** or **DOWN** button until **PHONE** is highlighted or use the **Touchscreen**.

PHONE shows the status of the cell phone.

8.4.5 Communication system

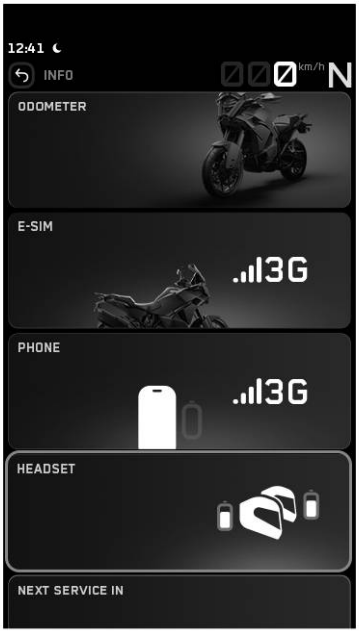

– Press the **SET** button when the menu is closed or use the **Touchscreen**.

> **Note**
> If the **Splitscreen** is open, press and hold the **SET** button.

– Press the **UP** or **DOWN** button until **INFO** is highlighted. The menu can be opened by pressing the **SET** button or by using the **Touchscreen**.
– Press the **UP** or **DOWN** button until **HEADSET** is highlighted or use the **Touchscreen**.

HEADSET shows the status of the **Headset**.

8.4.6 warnings

Condition: Message or warning is present

– Press the **SET** button when the menu is closed or use the **Touchscreen**.

Note
If the **Splitscreen** is open, press and hold the **SET** button.

– Press the **UP** or **DOWN** button until **INFO** is highlighted. The menu can be opened by pressing the **SET** button or by using the **Touchscreen**.
– Press the **UP** or **DOWN** button until **WARNINGS** is highlighted. The menu can be opened by pressing the **SET** button or by using the **Touchscreen**.

Note
If warnings are available, the general warning light ⚠ lights up.
The warnings that have occurred are saved in the display until they are no longer active.

8.4.7 Extra functions

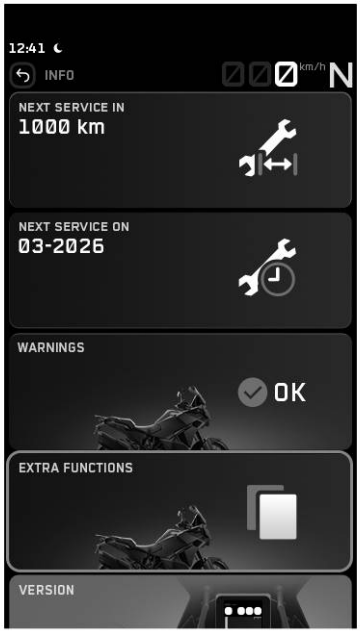

– Press the **SET** button when the menu is closed or use the **Touchscreen**.

Note
If the **Splitscreen** is open, press and hold the **SET** button.

– Press the **UP** or **DOWN** button until **INFO** is highlighted. The menu can be opened by pressing the **SET** button or by using the **Touchscreen**.
– Press the **UP** or **DOWN** button until **EXTRA FUNCTIONS** is highlighted. The menu can be opened by pressing the **SET** button or by using the **Touchscreen**.

Note
The optional extra functions are listed.
The current **KTM PowerParts** and available software are listed on the KTM website.
For the first 1500 km, this is menu item **DEMO MODE**.

8.4.8 Demo mode

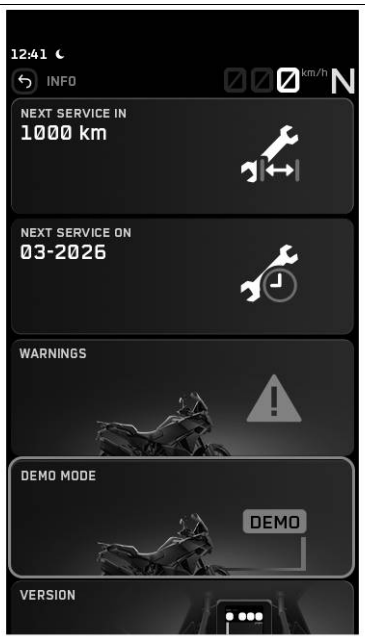

– Press the **SET** button when the menu is closed or use the **Touchscreen**.

Note
If the **Splitscreen** is open, press and hold the **SET** button.

– Press the **UP** or **DOWN** button until **INFO** is highlighted. The menu can be opened by pressing the **SET** button or by using the **Touchscreen**.
– Press the **UP** or **DOWN** button until **DEMO MODE** is highlighted. The menu can be opened by pressing the **SET** button or by using the **Touchscreen**.

Note
The activated demo mode functions (p. 38) are listed.
After the demo mode expires, the optional software functions are available from authorized partners.
After the first 1500 km, this is menu item **EXTRA FUNCTIONS**.

8.5 Heating

Condition: **Heated Grips** or **Heated Seat** is set to available in menu **SETTINGS**

– Press the **SET** button when the menu is closed or use the **Touchscreen**.

Note
If the **Splitscreen** is open, press and hold the **SET** button.

– Press the **UP** or **DOWN** button until **HEATING** is highlighted. The menu can be opened by pressing the **SET** button or by using the **Touchscreen**.

8.5.1 heated grip

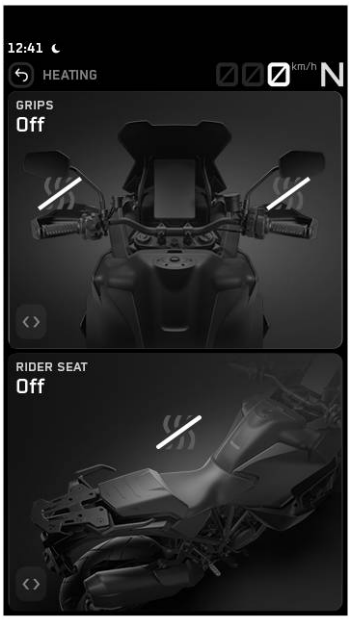

Condition: The grip heater is set to available in menu **SETTINGS**

– Press the **SET** button when the menu is closed or use the **Touchscreen**.

Note
If the **Splitscreen** is open, press and hold the **SET** button.

– Press the **UP** or **DOWN** button until **HEATING** is highlighted. The menu can be opened by pressing the **SET** button or by using the **Touchscreen**.
– Press the **UP** or **DOWN** button until **GRIPS** is highlighted or use the **Touchscreen**.
– Press the **LEFT** or **RIGHT** button to adjust **Heated Grips**. Press the **SET** button to confirm the selection or use the **Touchscreen**.

8.5.2 Rider's seat heater

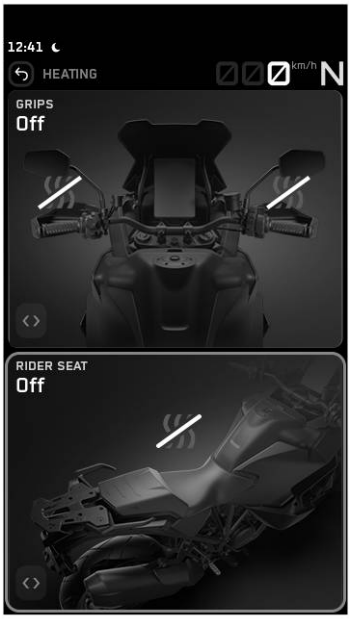

Condition: The seat heating is set to available in menu **SETTINGS**.

– Press the **SET** button when the menu is closed or use the **Touchscreen**.

Note
If the **Splitscreen** is open, press and hold the **SET** button.

– Press the **UP** or **DOWN** button until **HEATING** is highlighted. The menu can be opened by pressing the **SET** button or by using the **Touchscreen**.
– Press the **UP** or **DOWN** button until **Seat Heating** is highlighted or use the **Touchscreen**.
– Press the **LEFT** or **RIGHT** button to adjust **RIDER SEAT**. Press the **SET** button to confirm the selection or use the **Touchscreen**.

8.6 navigation

– Press the **SET** button when the menu is closed or use the **Touchscreen**.

Note
If the **Splitscreen** is open, press and hold the **SET** button.

– Press the **UP** or **DOWN** button until **MAP NAVIGATION** is highlighted. The menu can be opened by pressing the **SET** button or by using the **Touchscreen**.

8.6.1 Search

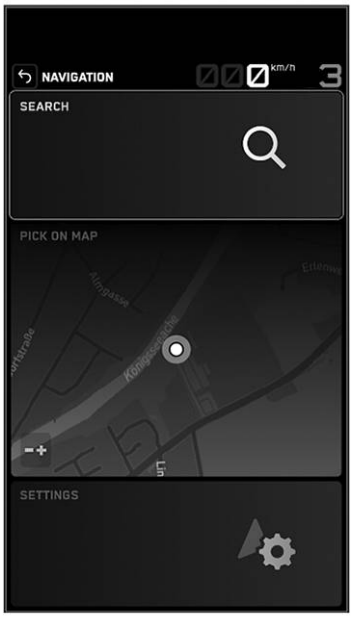

Condition: Motorcycle is stationary

– Press the **SET** button when the menu is closed or use the **Touchscreen**.

Note
If the **Splitscreen** is open, press and hold the **SET** button.

– Press the **UP** or **DOWN** button until **MAP NAVIGATION** is highlighted. The menu can be opened by pressing the **SET** button or by using the **Touchscreen**.
– Press the **UP** or **DOWN** button until **SEARCH** is highlighted. The sub-menu can be opened by pressing the **SET** button or by using the **Touchscreen**.

8.6.2 Choose on Map

Condition: Motorcycle is stationary

– Press the **SET** button when the menu is closed or use the **Touchscreen**.

> **Note**
> If the **Splitscreen** is open, press and hold the **SET** button.

– Press the **UP** or **DOWN** button until **MAP NAVIGATION** is highlighted. The menu can be opened by pressing the **SET** button or by using the **Touchscreen**.
– Press the **UP** or **DOWN** button until **PICK ON MAP** is highlighted. The sub-menu can be opened by pressing the **SET** button or by using the **Touchscreen**.

8.6.3 Stop navigation

Condition: Motorcycle is stationary

– Press the **SET** button when the menu is closed or use the **Touchscreen**.

> **Note**
> If the **Splitscreen** is open, press and hold the **SET** button.

– Press the **UP** or **DOWN** button until **MAP NAVIGATION** is highlighted. The menu can be opened by pressing the **SET** button or by using the **Touchscreen**.
– Press the **UP** or **DOWN** button until **STOP NAVIGATION** is highlighted. The sub-menu can be opened by pressing the **SET** button or by using the **Touchscreen**.

8.6.4 Overview of routes

Condition: Motorcycle is stationary

– Press the **SET** button when the menu is closed or use the **Touchscreen**.

> **Note**
> If the **Splitscreen** is open, press and hold the **SET** button.

– Press the **UP** or **DOWN** button until **MAP NAVIGATION** is highlighted. The menu can be opened by pressing the **SET** button or by using the **Touchscreen**.
– Press the **UP** or **DOWN** button until **ROUTE OVERVIEW** is highlighted. The sub-menu can be opened by pressing the **SET** button or by using the **Touchscreen**.

8.6.5 Settings

Condition: Motorcycle is stationary

– Press the **SET** button when the menu is closed or use the **Touchscreen**.

> **Note**
> If the **Splitscreen** is open, press and hold the **SET** button.

– Press the **UP** or **DOWN** button until **MAP NAVIGATION** is highlighted. The menu can be opened by pressing the **SET** button or by using the **Touchscreen**.
– Press the **UP** or **DOWN** button until **SETTINGS** is highlighted. The sub-menu can be opened by pressing the **SET** button or by using the **Touchscreen**.

8.6.5.1 Offline maps

Condition: Motorcycle is stationary

– Press the **SET** button when the menu is closed or use the **Touchscreen**.

Note
If the **Splitscreen** is open, press and hold the **SET** button.

– Press the **UP** or **DOWN** button until **MAP NAVIGATION** is highlighted. The menu can be opened by pressing the **SET** button or by using the **Touchscreen**.
– Press the **UP** or **DOWN** button until **SETTINGS** is highlighted. The menu can be opened by pressing the **SET** button or by using the **Touchscreen**.
– Press the **UP** or **DOWN** button until **OFFLINE MAPS** is highlighted. The sub-menu can be opened by pressing the **SET** button or by using the **Touchscreen**.

Various maps can be downloaded from menu **OFFLINE MAPS**.

8.6.5.2 Map Style

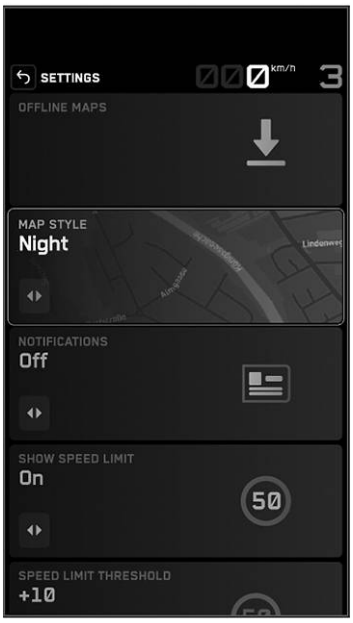

Condition: Motorcycle is stationary

– Press the **SET** button when the menu is closed or use the **Touchscreen**.

Note
If the **Splitscreen** is open, press and hold the **SET** button.

– Press the **UP** or **DOWN** button until **MAP NAVIGATION** is highlighted. The menu can be opened by pressing the **SET** button or by using the **Touchscreen**.
– Press the **UP** or **DOWN** button until **SETTINGS** is highlighted. The menu can be opened by pressing the **SET** button or by using the **Touchscreen**.
– Press the **UP** or **DOWN** button until **MAP STYLE** is highlighted. The sub-menu can be opened by pressing the **SET** button or by using the **Touchscreen**.
– The **Map Style** can be configured by pressing the **RIGHT**or **LEFT** button. Press the **SET** button to confirm the selection or use the **Touchscreen**.

8.6.5.3 Notifications

Condition: Motorcycle is stationary

– Press the **SET** button when the menu is closed or use the **Touchscreen**.

> **Note**
> If the **Splitscreen** is open, press and hold the **SET** button.

– Press the **UP** or **DOWN** button until **MAP NAVIGATION** is highlighted. The menu can be opened by pressing the **SET** button or by using the **Touchscreen**.
– Press the **UP** or **DOWN** button until **SETTINGS** is highlighted. The menu can be opened by pressing the **SET** button or by using the **Touchscreen**.
– Press the **UP** or **DOWN** button until **NOTIFICATIONS** is highlighted or use **Touchscreen**.
– Press the **RIGHT** or **LEFT** button to configure the **Notifications**. Press the **SET** button to confirm the selection or use the **Touchscreen**.

8.6.5.4 Display speed control

Condition: Motorcycle is stationary

– Press the **SET** button when the menu is closed or use the **Touchscreen**.

> **Note**
> If the **Splitscreen** is open, press and hold the **SET** button.

– Press the **UP** or **DOWN** button until **MAP NAVIGATION** is highlighted. The menu can be opened by pressing the **SET** button or by using the **Touchscreen**.
– Press the **UP** or **DOWN** button until **SETTINGS** is highlighted. The menu can be opened by pressing the **SET** button or by using the **Touchscreen**.
– Press the **UP** or **DOWN** button until **SHOW SPEED LIMIT** is highlighted or use the **Touchscreen**.
– **Show Speed Limit** can be configured by pressing the **RIGHT** or **LEFT** button. Press the **SET** button to confirm the selection or use the **Touchscreen**.

8.6.5.5 Threshold value of speed control

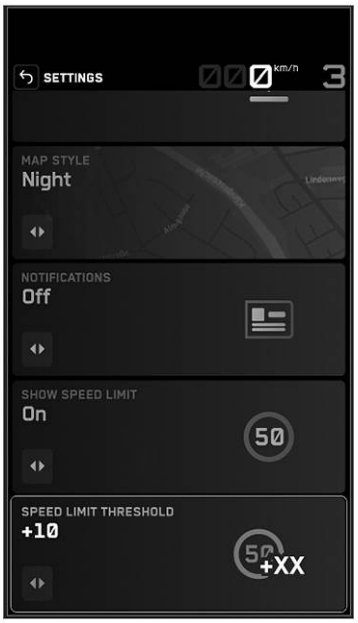

Condition: Motorcycle is stationary

– Press the **SET** button when the menu is closed or use the **Touchscreen**.

Note
If the **Splitscreen** is open, press and hold the **SET** button.

– Press the **UP** or **DOWN** button until **MAP NAVIGATION** is highlighted. The menu can be opened by pressing the **SET** button or by using the **Touchscreen**.
– Press the **UP** or **DOWN** button until **SETTINGS** is highlighted. The menu can be opened by pressing the **SET** button or by using the **Touchscreen**.
– Press the **UP** or **DOWN** button until **SPEED LIMIT THRESHOLD** is highlighted or use the **Touchscreen**.
– **Speed Limit Threshold** can be configured by pressing the **RIGHT** or **LEFT** button. Press the **SET** button to confirm the selection or use the **Touchscreen**.

8.7 Apps

– Press the **SET** button when the menu is closed or use the **Touchscreen**.

Note
If the **Splitscreen** is open, press and hold the **SET** button.

– Press the **UP** or **DOWN** button until **APPS** is highlighted. The menu can be opened by pressing the **SET** button or by using the **Touchscreen**.

8.7.1 Calls

Condition: Motorcycle is stationary

– Press the **SET** button when the menu is closed or use the **Touchscreen**.

> **Note**
> If the **Splitscreen** is open, press and hold the **SET** button.

– Press the **UP** or **DOWN** button until **APPS** is highlighted. The menu can be opened by pressing the **SET** button or by using the **Touchscreen**.
– Press the **UP** or **DOWN** button until **CALL** is highlighted. The sub-menu can be opened by pressing the **SET** button or by using the **Touchscreen**.

8.7.2 Music

Condition: Motorcycle is stationary

– Press the **SET** button when the menu is closed or use the **Touchscreen**.

> **Note**
> If the **Splitscreen** is open, press and hold the **SET** button.

– Press the **UP** or **DOWN** button until **APPS** is highlighted. The menu can be opened by pressing the **SET** button or by using the **Touchscreen**.
– Press the **UP** or **DOWN** button until **MUSIC** is highlighted. The sub-menu can be opened by pressing the **SET** button or by using the **Touchscreen**.

8.8 Settings

Condition: Motorcycle is stationary

– Press the **SET** button when the menu is closed or use the **Touchscreen**.

Note
If the **Splitscreen** is open, press and hold the **SET** button.

– Press the **UP** or **DOWN** button until **SETTINGS** is highlighted. The menu can be opened by pressing the **SET** button or by using the **Touchscreen**.

In the **SETTINGS** menu, favorites, quick selections, **Connectivity** (optional), and the shift warning light can be configured. Settings can be made for units or various values. Several functions can be enabled or disabled.

8.8.1 favorites

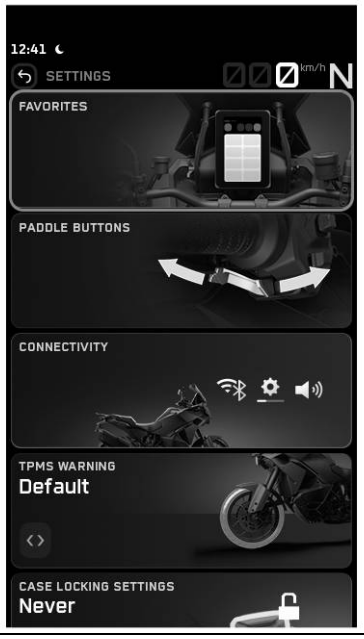

Condition: Motorcycle is stationary

– Press the **SET** button when the menu is closed or use the **Touchscreen**.

Note
If the **Splitscreen** is open, press and hold the **SET** button.

– Press the **UP** or **DOWN** button until **SETTINGS** is highlighted. The menu can be opened by pressing the **SET** button or by using the **Touchscreen**.
– Press the **UP** or **DOWN** button until **FAVORITES** is highlighted. The menu can be opened by pressing the **SET** button or by using the **Touchscreen**.

Up to eight items of information can be selected in the **FAVORITES** menu.

8.8.1.1 Favorites display 1–8

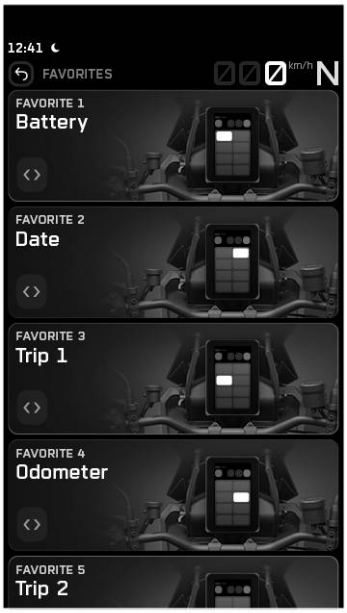

Condition: Motorcycle is stationary

– Press the **SET** button when the menu is closed or use the **Touchscreen**.

Note
If the **Splitscreen** is open, press and hold the **SET** button.

– Press the **UP** or **DOWN** button until **SETTINGS** is highlighted. The menu can be opened by pressing the **SET** button or by using the **Touchscreen**.
– Press the **UP** or **DOWN** button until **FAVORITES** is highlighted. The menu can be opened by pressing the **SET** button or by using the **Touchscreen**.
– Press the **UP** or **DOWN** button to select **Favorite 1**, **Favorite 2**, **Favorite 3**, **Favorite 4**, **Favorite 5**, **Favorite 6**, **Favorite 7** or **Favorite 8**, or use **Touchscreen**.
– Press the **RIGHT** or **LEFT** button to select the desired information. Press the **SET** button to confirm the selection or use the **Touchscreen**.

8.8.2 Paddle buttons

Condition: Motorcycle is stationary

– Press the **SET** button when the menu is closed or use the **Touchscreen**.

Note
If the **Splitscreen** is open, press and hold the **SET** button.

– Press the **UP** or **DOWN** button until **SETTINGS** is highlighted. The menu can be opened by pressing the **SET** button or by using the **Touchscreen**.
– Press the **UP** or **DOWN** button until **PADDLE BUTTONS** is highlighted. The menu can be opened by pressing the **SET** button or by using the **Touchscreen**.
– Press the **RIGHT** or **LEFT** button to configure the **Paddle Buttons**. Press the **SET** button to confirm the selection or use the **Touchscreen**.

8.8.3 Connectivity

Condition: Motorcycle is stationary

– Press the **SET** button when the menu is closed or use the **Touchscreen**.

Note
If the **Splitscreen** is open, press and hold the **SET** button.

– Press the **UP** or **DOWN** button until **SETTINGS** is highlighted. The menu can be opened by pressing the **SET** button or by using the **Touchscreen**.
– Press the **UP** or **DOWN** button until **CONNECTIVITY** is highlighted. The menu can be opened by pressing the **SET** button or by using the **Touchscreen**.

The standard **Bluetooth®** 4.0 must be supported.

In sub-menu **Connectivity**, a suitable cell phone or suitable communication system can be connected via **Bluetooth®** to the dashboard, allowing the audio and navigation functions to be configured.

Note
Not every cell phone and communication system is suitable for pairing with the dashboard. For details, contact an authorized dealer.

8.8.3.1 Bluetooth & WiFi

Condition: Motorcycle is stationary

– Press the **SET** button when the menu is closed or use the **Touchscreen**.

Note
If the **Splitscreen** is open, press and hold the **SET** button.

– Press the **UP** or **DOWN** button until **SETTINGS** is highlighted. The menu can be opened by pressing the **SET** button or by using the **Touchscreen**.
– Press the **UP** or **DOWN** button until **CONNECTIVITY** is highlighted. The menu can be opened by pressing the **SET** button or by using the **Touchscreen**.
– Press the **UP** or **DOWN** button until **BLUETOOTH & WIFI** is highlighted. The sub-menu can be opened by pressing the **SET** button or by using the **Touchscreen**.

8.8.3.2 Updates

Condition: Motorcycle is stationary, **WIFI** is connected

– Press the **SET** button when the menu is closed or use the **Touchscreen**.

> **Note**
> If the **Splitscreen** is open, press and hold the **SET** button.

– Press the **UP** or **DOWN** button until **SETTINGS** is highlighted. The menu can be opened by pressing the **SET** button or by using the **Touchscreen**.
– Press the **UP** or **DOWN** button until **CONNECTIVITY** is highlighted. The menu can be opened by pressing the **SET** button or by using the **Touchscreen**.
– Press the **UP** or **DOWN** button until **UPDATES** is highlighted. Press the **SET** button to check for updates or use the **Touchscreen**.

8.8.3.3 WIFI settings

Condition: Motorcycle is stationary

– Press the **SET** button when the menu is closed or use the **Touchscreen**.

> **Note**
> If the **Splitscreen** is open, press and hold the **SET** button.

– Press the **UP** or **DOWN** button until **SETTINGS** is highlighted. The menu can be opened by pressing the **SET** button or by using the **Touchscreen**.
– Press the **UP** or **DOWN** button until **CONNECTIVITY** is highlighted. The menu can be opened by pressing the **SET** button or by using the **Touchscreen**.
– Press the **UP** or **DOWN** button until **BLUETOOTH & WIFI** is highlighted. The sub-menu can be opened by pressing the **SET** button or by using the **Touchscreen**.
– Press the **UP** or **DOWN** button until **WIFI** is highlighted. The sub-menu can be opened by pressing the **SET** button or by using the **Touchscreen**.

8.8.3.4 WiFi

Condition: Motorcycle is stationary

– Press the **SET** button when the menu is closed or use the **Touchscreen**.

> **Note**
> If the **Splitscreen** is open, press and hold the **SET** button.

– Press the **UP** or **DOWN** button until **SETTINGS** is highlighted. The menu can be opened by pressing the **SET** button or by using the **Touchscreen**.
– Press the **UP** or **DOWN** button until **CONNECTIVITY** is highlighted. The menu can be opened by pressing the **SET** button or by using the **Touchscreen**.
– Press the **UP** or **DOWN** button until **BLUETOOTH & WIFI** is highlighted. The sub-menu can be opened by pressing the **SET** button or by using the **Touchscreen**.
– Press the **UP** or **DOWN** button until **WIFI** is highlighted or use the **Touchscreen**.
– Use the **LEFT** or **RIGHT** button to select the menu item and turn **WIFI** on or off. Press the **SET** button to confirm the selection or use the **Touchscreen**.

8.8.3.5 Adding network

Condition: Motorcycle is stationary

– Press the **SET** button when the menu is closed or use the **Touchscreen**.

> **Note**
> If the **Splitscreen** is open, press and hold the **SET** button.

– Press the **UP** or **DOWN** button until **SETTINGS** is highlighted. The menu can be opened by pressing the **SET** button or by using the **Touchscreen**.
– Press the **UP** or **DOWN** button until **CONNECTIVITY** is highlighted. The menu can be opened by pressing the **SET** button or by using the **Touchscreen**.
– Press the **UP** or **DOWN** button until **BLUETOOTH & WIFI** is highlighted. The sub-menu can be opened by pressing the **SET** button or by using the **Touchscreen**.
– Press the **UP** or **DOWN** button until **ADD NETWORK** is highlighted. Press the **SET** button to open the submenu or use **Touchscreen**.
– The dashboard starts searching for a suitable **WIFI**. If the search is successful, the name of the **WIFI** will be displayed in the Add network submenu. Press the **SET** button to initiate the pairing or use **Touchscreen**.

8.8.3.6 Bluetooth settings

Condition: Motorcycle is stationary

– Press the **SET** button when the menu is closed or use the **Touchscreen**.

> **Note**
> If the **Splitscreen** is open, press and hold the **SET** button.

– Press the **UP** or **DOWN** button until **SETTINGS** is highlighted. The menu can be opened by pressing the **SET** button or by using the **Touchscreen**.
– Press the **UP** or **DOWN** button until **CONNECTIVITY** is highlighted. The menu can be opened by pressing the **SET** button or by using the **Touchscreen**.
– Press the **UP** or **DOWN** button until **BLUETOOTH & WIFI** is highlighted. The sub-menu can be opened by pressing the **SET** button or by using the **Touchscreen**.
– Press the **UP** or **DOWN** button until **Bluetooth** is highlighted. The sub-menu can be opened by pressing the **SET** button or by using the **Touchscreen**.

> **Note**
> Not every cell phone and communication system is suitable for pairing with the dashboard.

8.8.3.7 Bluetooth

Condition: Motorcycle is stationary

– Press the **SET** button when the menu is closed or use the **Touchscreen**.

> **Note**
> If the **Splitscreen** is open, press and hold the **SET** button.

– Press the **UP** or **DOWN** button until **SETTINGS** is highlighted. The menu can be opened by pressing the **SET** button or by using the **Touchscreen**.
– Press the **UP** or **DOWN** button until **CONNECTIVITY** is highlighted. The menu can be opened by pressing the **SET** button or by using the **Touchscreen**.
– Press the **UP** or **DOWN** button until **BLUETOOTH & WIFI** is highlighted. The sub-menu can be opened by pressing the **SET** button or by using the **Touchscreen**.
– Press the **UP** or **DOWN** button until **BLUETOOTH** is highlighted or use the **Touchscreen**.
– Use the **RIGHT** or **LEFT** button to select a menu item to switch the **Bluetooth®** function on or off. Press the **SET** button to confirm the selection or use the **Touchscreen**.

Function **Bluetooth®** must be activated in order to pair a suitable cell phone or communication system with the vehicle.

Note
Not every cell phone and communication system is suitable for pairing with the dashboard.

8.8.3.8 Phone pairing

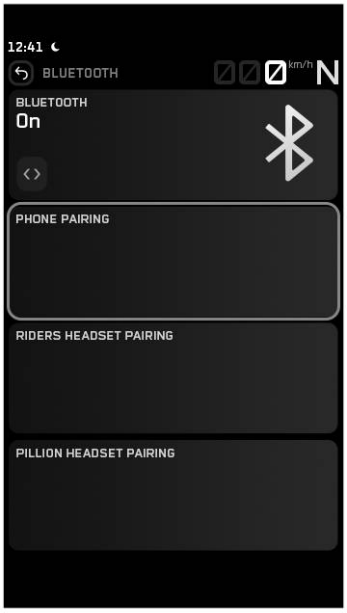

Condition: Motorcycle is stationary, Function **Bluetooth** activated, Function **Bluetooth®** also activated on the device that is to be paired

– Press the **SET** button when the menu is closed or use the **Touchscreen**.

Note
If the **Splitscreen** is open, press and hold the **SET** button.

– Press the **UP** or **DOWN** button until **SETTINGS** is highlighted. The menu can be opened by pressing the **SET** button or by using the **Touchscreen**.
– Press the **UP** or **DOWN** button until **CONNECTIVITY** is highlighted. The menu can be opened by pressing the **SET** button or by using the **Touchscreen**.
– Press the **UP** or **DOWN** button until **BLUETOOTH & WIFI** is highlighted. The sub-menu can be opened by pressing the **SET** button or by using the **Touchscreen**.
– Press the **UP** or **DOWN** button until **PHONE PAIRING** is marked. The sub-menu can be opened by pressing the **SET** button or by using the **Touchscreen**.

Note
Only one cellphone can be paired with the combination instrument.

– The dashboard starts the search for a suitable cell phone. If the search is successful, the name of the cell phone is displayed in submenu **PHONE PAIRING**. Press the **SET** button to initiate the pairing or use **Touchscreen**.

The cell phone must be visible via **Bluetooth®** in order for the cell phone to be found by the dashboard.

– A message appears on the combination instrument indicating that this is now ready for pairing. The pairing is successfully

completed by confirming the **Passkey** on the cell phone and on the dashboard.

Note

Once the pairing is completed, the name of the paired cell phone is displayed in submenu **Phone**.

Press the **UP** or **DOWN** button until the paired device is marked. The paired device can be deleted by pressing the **SET** button.

Not every cell phone is suitable for pairing with the dashboard.

– Move the previously paired device into the range of the combination instrument while the **Bluetooth®** function is active.
  - ✓ The device is automatically paired with the combination instrument.
  - ✗ If the device is not automatically paired with the combination instrument after approx. 30 seconds:
    - – Restart combination instrument or **Pairing** repeat procedure.

In submenu **Phone**, a suitable cell phone can be paired with the dashboard.

8.8.3.9 Rider communication system pairing

Condition: Motorcycle is stationary, Function **Bluetooth®** activated, Function **Bluetooth®** also activated on the device that is to be paired

– Press the **SET** button when the menu is closed or use the **Touchscreen**.

Note

If the **Splitscreen** is open, press and hold the **SET** button.

– Press the **UP** or **DOWN** button until **SETTINGS** is highlighted. The menu can be opened by pressing the **SET** button or by using the **Touchscreen**.
– Press the **UP** or **DOWN** button until **CONNECTIVITY** is highlighted. The menu can be opened by pressing the **SET** button or by using the **Touchscreen**.
– Press the **UP** or **DOWN** button until **BLUETOOTH & WIFI** is highlighted. The sub-menu can be opened by pressing the **SET** button or by using the **Touchscreen**.
– Press the **UP** or **DOWN** button until **BLUETOOTH** is highlighted. The sub-menu can be opened by pressing the **SET** button or by using the **Touchscreen**.
– Press the **UP** or **DOWN** button until **RIDERS HEADSET PAIRING** is marked. The sub-menu can be opened by pressing the **SET** button or by using the **Touchscreen**.
– The vehicle starts searching for a suitable communication system. If the search was successful, the name of the rider's audio device is displayed in the **New Pairing** submenu. Press the **SET** button to initiate the pairing or use **Touchscreen**.

The communication system must be in pairing mode for the communication system to be found by the vehicle. Follow the instructions in the communication system owner's manual.

Note

Press the **UP** or **DOWN** button until **Delete Pairing** is highlighted. The paired device can be deleted by pressing the **SET** button.

Not every communication system is suitable for pairing with the vehicle.

– Move the previously paired device into the range of the vehicle while the **Bluetooth®** function is active.
  ✓ The device is automatically connected with the vehicle.
  ✗ If the device is not automatically connected with the vehicle after approx. 30 seconds:
    – Switch on the vehicle again or repeat the **New Pairing** procedure.

In the **Riders Headset** submenu, a suitable rider communication system can be paired with the vehicle.

8.8.3.10 Passenger communication system pairing

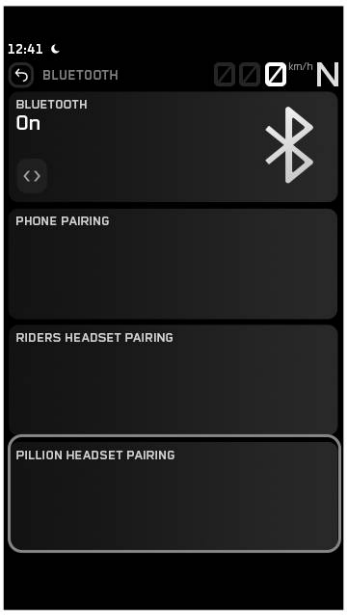

Condition: Motorcycle is stationary, Function **Bluetooth®** activated, Function **Bluetooth®** also activated on the device that is to be paired

– Press the **SET** button when the menu is closed or use the **Touchscreen**.

Note

If the **Splitscreen** is open, press and hold the **SET** button.

– Press the **UP** or **DOWN** button until **SETTINGS** is highlighted. The menu can be opened by pressing the **SET** button or by using the **Touchscreen**.
– Press the **UP** or **DOWN** button until **CONNECTIVITY** is highlighted. The menu can be opened by pressing the **SET** button or by using the **Touchscreen**.
– Press the **UP** or **DOWN** button until **BLUETOOTH & WIFI** is highlighted. The sub-menu can be opened by pressing the **SET** button or by using the **Touchscreen**.
– Press the **UP** or **DOWN** button until **BLUETOOTH** is highlighted. The sub-menu can be opened by pressing the **SET** button or by using the **Touchscreen**.
– Press the **UP** or **DOWN** button until **PILLION HEADSET PAIRING** is marked. The sub-menu can be opened by pressing the **SET** button or by using the **Touchscreen**.
– The vehicle starts searching for a suitable communication system. If the search was successful, the name of the passenger's headset is displayed in the **New Pairing** submenu. Press the **SET** button to initiate the pairing or use **Touchscreen**.

The communication system must be in pairing mode for the communication system to be found by the vehicle. Follow the instructions in the communication system owner's manual.

Note

Press the **UP** or **DOWN** button until **Delete Pairing** is highlighted. The paired device can be deleted by pressing the **SET** button.

Not every communication system is suitable for pairing with the vehicle.

– Move the previously paired device into the range of the vehicle while the **Bluetooth®** function is active.
  ✓ The device is automatically connected with the vehicle.
  ✗ If the device is not automatically connected with the vehicle after approx. 30 seconds:
    – Switch on the vehicle again or repeat the **New Pairing** procedure.

In the passenger communication system pairing submenu, a suitable communication system for the rider can be paired with the vehicle.

8.8.4 TPMS warnings

Condition: Motorcycle is stationary

– Press the **SET** button when the menu is closed or use the **Touchscreen**.

Note

If the **Splitscreen** is open, press and hold the **SET** button.

– Press the **UP** or **DOWN** button until **SETTINGS** is highlighted. The menu can be opened by pressing the **SET** button or by using the **Touchscreen**.
– Press the **UP** or **DOWN** button until **TPMS WARNINGS** is highlighted or use the **Touchscreen**.
– Press the **RIGHT** or **LEFT** button to set the value for **TPMS WARNINGS**. Press the **SET** button to confirm the selection or use the **Touchscreen**.

Three different **TPMS** modes can be selected in menu **TPMS WARNINGS**.

The **Default** mode corresponds to the preset basic setting of the tire air pressure monitor recommended by KTM.

The **Custom** mode corresponds to the custom setting of the tire air pressure monitor.

Note

Before the **TPMS** mode **Custom** is selected, the desired air pressure must be adjusted on the tires.

When the **TPMS** mode **Custom** is selected, the next value received by the **TPMS** sensors is stored as the new guide value.

It may take some time for the **TPMS** sensors to send a value and for the new reference value to be saved.

The reference value can be between 1 bar and 5 bar (between 14.5 psi and 72.5 psi).

The stored reference value is displayed in the **Bike Info** menu.

If the value currently measured by the tire air pressure sensors is more than 50% above or 20% below the stored guide value, a warning appears on the dashboard display.

In **Warnings Off** mode, the warnings from the tire air pressure monitor are deactivated. The tire air pressure is still measured by the tire air pressure sensors, but warnings no longer appear on the dashboard display.

Note

KTM recommends **Default** mode.

A second wheel set can be programmed via the KTM diagnostics tool. An authorized dealer will be happy to help.

8.8.5 Case locking setting

Condition: Motorcycle is stationary

– Press the **SET** button when the menu is closed or use the **Touchscreen**.

Note

If the **Splitscreen** is open, press and hold the **SET** button.

– Press the **UP** or **DOWN** button until **SETTINGS** is highlighted. The menu can be opened by pressing the **SET** button or by using the **Touchscreen**.
– Press the **UP** or **DOWN** button until **CASE LOCKING SETTINGS** is highlighted or use the **Touchscreen**.
– Press the **RIGHT** or **LEFT** button to set the value for **Case Locking Settings**. Press the **SET** button to confirm the selection or use the **Touchscreen**.

The case lock setting can be set between **Never**, **Immediate**, **Short** (2 min) and **Long** (10 min).

8.8.6 Shift Light

Condition: Motorcycle is stationary

– Press the **SET** button when the menu is closed or use the **Touchscreen**.

> **Note**
> If the **Splitscreen** is open, press and hold the **SET** button.

– Press the **UP** or **DOWN** button until **SETTINGS** is highlighted. The menu can be opened by pressing the **SET** button or by using the **Touchscreen**.
– Press the **UP** or **DOWN** button until **SHIFT LIGHT** is highlighted. The menu can be opened by pressing the **SET** button or by using the **Touchscreen**.

The shift warning light can be configured in the **Shift Light** sub-menu.

> **Note**
> The rev limiter is dependent on the coolant temperature.

8.8.6.1 RPM1

Condition: Motorcycle is stationary, **ODO** > 1,000 km (621 miles)

– Press the **SET** button when the menu is closed or use the **Touchscreen**.

> **Note**
> If the **Splitscreen** is open, press and hold the **SET** button.

– Press the **UP** or **DOWN** button until **SETTINGS** is highlighted. The menu can be opened by pressing the **SET** button or by using the **Touchscreen**.
– Press the **UP** or **DOWN** button until **SHIFT LIGHT** is highlighted. The menu can be opened by pressing the **SET** button or by using the **Touchscreen**.
– Press the **UP** or **DOWN** button until **RPM1** is highlighted or use the **Touchscreen**.
– Press the **RIGHT** or **LEFT** button to set the value for **RPM1**. Press the **SET** button to confirm the selection or use the **Touchscreen**.

RPM1 must not be larger than **RPM2**.

> **Note**
> **RPM1** can be set in intervals of 500 between 5,500 and 10,000 rpm.
> The shift light can also be turned off.
> If the engine speed reaches the set value **RPM1**, the engine speed display flashes as a shift warning light.

8.8.6.2 RPM2

Condition: Motorcycle is stationary, **ODO** > 1,000 km (621 miles)

– Press the **SET** button when the menu is closed or use the **Touchscreen**.

Note
If the **Splitscreen** is open, press and hold the **SET** button.

– Press the **UP** or **DOWN** button until **SETTINGS** is highlighted. The menu can be opened by pressing the **SET** button or by using the **Touchscreen**.
– Press the **UP** or **DOWN** button until **SHIFT LIGHT** is highlighted. The menu can be opened by pressing the **SET** button or by using the **Touchscreen**.
– Press the **UP** or **DOWN** button until **RPM2** is highlighted or use the **Touchscreen**.
– Press the **RIGHT** or **LEFT** button to set the value for **RPM2**. Press the **SET** button to confirm the selection or use the **Touchscreen**.

RPM2 must not be smaller than **RPM1**.

Note
RPM2 can be set in intervals of 500 between 7,000 and 10,000 rpm.
The shift light can also be turned off.
If the engine speed reaches the set value **RPM2**, the screen flashes as a shift warning light.

8.8.7 Coming Home light

Condition: Motorcycle is stationary

– Press the **SET** button when the menu is closed or use the **Touchscreen**.

Note
If the **Splitscreen** is open, press and hold the **SET** button.

– Press the **UP** or **DOWN** button until **SETTINGS** is highlighted. The menu can be opened by pressing the **SET** button or by using the **Touchscreen**.
– Press the **UP** or **DOWN** button until **COMING HOME LIGHT** is highlighted or use the **Touchscreen**.
– Press the **LEFT** or **RIGHT** button to adjust the value for **Coming Home Light**. Press the **SET** button to confirm the selection or use the **Touchscreen**.

The **Coming Home** light can be set to short (15 seconds) or long (30 seconds) and can be switched off.

8.8.8 Light system warnings

Condition: Motorcycle is stationary

– Press the **SET** button when the menu is closed or use the **Touchscreen**.

Note
If the **Splitscreen** is open, press and hold the **SET** button.

– Press the **UP** or **DOWN** button until **SETTINGS** is highlighted. The menu can be opened by pressing the **SET** button or by using the **Touchscreen**.
– Press the **UP** or **DOWN** button until **LIGHT SYS. WARNING** is highlighted. The menu can be opened by pressing the **SET** button or by using the **Touchscreen**.
– Press the **RIGHT** or **LEFT** button to set the value for **Light System Warnings**. Press the **SET** button to confirm the selection or use the **Touchscreen**.

If “No warnings” is selected, no light warnings will be displayed on the dashboard.

8.8.9 daytime running light

Condition: Motorcycle is stationary

– Press the **SET** button when the menu is closed or use the **Touchscreen**.

Note
If the **Splitscreen** is open, press and hold the **SET** button.

– Press the **UP** or **DOWN** button until **SETTINGS** is highlighted. The menu can be opened by pressing the **SET** button or by using the **Touchscreen**.
– Press the **UP** or **DOWN** button until **DAYTIME RUNNING LIGHT** is highlighted. The menu can be opened by pressing the **SET** button or by using the **Touchscreen**.
– Press the **LEFT** or **RIGHT** button to turn **Daytime Running Light** on or off. Press the **SET** button to confirm the selection or use the **Touchscreen**.

8.8.10 Button Illumination

Condition: Motorcycle is stationary

– Press the **SET** button when the menu is closed or use the **Touchscreen**.

> **Note**
> If the **Splitscreen** is open, press and hold the **SET** button.

– Press the **UP** or **DOWN** button until **SETTINGS** is highlighted. The menu can be opened by pressing the **SET** button or by using the **Touchscreen**.
– Press the **UP** or **DOWN** button until **BUTTON ILLUMINATION** is highlighted. The menu can be opened by pressing the **SET** button or by using the **Touchscreen**.
– Press the **RIGHT** or **LEFT** button to set the value for **Button Illumination**. Press the **SET** button to confirm the selection or use the **Touchscreen**.

8.8.11 Cornering light test

Condition: Motorcycle is stationary

– Press the **SET** button when the menu is closed or use the **Touchscreen**.

> **Note**
> If the **Splitscreen** is open, press and hold the **SET** button.

– Press the **UP** or **DOWN** button until **SETTINGS** is highlighted. The menu can be opened by pressing the **SET** button or by using the **Touchscreen**.
– Press the **UP** or **DOWN** button until **CORNER LIGHT TEST** is highlighted. The menu can be opened by pressing the **SET** button or by using the **Touchscreen**.
– Press the **LEFT** or **RIGHT** button to turn **Corner Light Test** on or off. Press the **SET** button to confirm the selection or use the **Touchscreen**.

8.8.12 Setting the time and date

Condition: Motorcycle is stationary

I01667-01

– Press the **SET** button when the menu is closed or use the **Touchscreen**.

Note
If the **Splitscreen** is open, press and hold the **SET** button.

– Press the **UP** or **DOWN** button until **SETTINGS** appears or use the **Touchscreen**.
– The menu can be opened by pressing the **SET** button or by using the **Touchscreen**.
– Press the **UP** or **DOWN** button until **CLOCK & DATE** is highlighted or use the **Touchscreen**.
– The sub-menu can be opened by pressing the **SET** button or by using the **Touchscreen**.

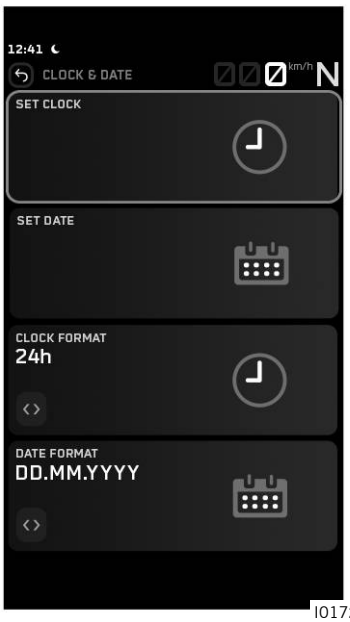

I01728-01

Setting the clock

– Press the **UP**or **DOWN** button until **SET CLOCK** is highlighted or use the **Touchscreen**.
– The sub-menu can be opened by pressing the **SET** button or by using the **Touchscreen**.
– Press the **UP**or **DOWN** button until the hours or minutes are highlighted or use the **Touchscreen**.
– Press the **RIGHT** or **LEFT** button to set the hours or minutes. Press the **SET** button to confirm the selection or use the **Touchscreen**.
– Press the **BACK** button to close the sub-menu or use the **Touchscreen**.

I01729-01

Setting the date

- Press the **UP**or **DOWN** button until **SET DATE** is highlighted or use the **Touchscreen**.
- The sub-menu can be opened by pressing the **SET** button or by using the **Touchscreen**.
- Press the **UP**or **DOWN** button until the day, month or year is highlighted or use the **Touchscreen**.
- Press the **RIGHT** or **LEFT** button to set the day, month or year. Press the **SET** button to confirm the selection or use the **Touchscreen**.
- Press the **BACK** button to close the sub-menu or use the **Touchscreen**.

8.8.12.1 Clock format

Condition: Motorcycle is stationary

- Press the **SET** button when the menu is closed or use the **Touchscreen**.

Note
If the **Splitscreen** is open, press and hold the **SET** button.

- Press the **UP** or **DOWN** button until **SETTINGS** is highlighted. The menu can be opened by pressing the **SET** button or by using the **Touchscreen**.
- Press the **UP** or **DOWN** button until **CLOCK & DATE** is highlighted. The menu can be opened by pressing the **SET** button or by using the **Touchscreen**.
- Press the **UP** or **DOWN** button until **CLOCK FORMAT** is highlighted or use the **Touchscreen**.
- Press the **RIGHT** or **LEFT** button to select the time format. Press the **SET** button to confirm the selection or use the **Touchscreen**.

Note
The possible settings are 24h and 12h.

8.8.12.2 Date format

Condition: Motorcycle is stationary

– Press the **SET** button when the menu is closed or use the **Touchscreen**.

Note
If the **Splitscreen** is open, press and hold the **SET** button.

– Press the **UP** or **DOWN** button until **SETTINGS** is highlighted. The menu can be opened by pressing the **SET** button or by using the **Touchscreen**.
– Press the **UP** or **DOWN** button until **CLOCK & DATE** is highlighted. The menu can be opened by pressing the **SET** button or by using the **Touchscreen**.
– Press the **UP** or **DOWN** button until **DATE FORMAT** is highlighted or use the **Touchscreen**.
– Press the **RIGHT** or **LEFT** button to select the date format. Press the **SET** button to confirm the selection or use the **Touchscreen**.

Note
The possible settings are DD.MM.YYYY, MM/DD/YYYY and YYYY-MM-DD.

8.8.13 Units

Condition: Motorcycle is stationary

– Press the **SET** button when the menu is closed or use the **Touchscreen**.

Note
If the **Splitscreen** is open, press and hold the **SET** button.

– Press the **UP** or **DOWN** button until **SETTINGS** is highlighted. The menu can be opened by pressing the **SET** button or by using the **Touchscreen**.
– Press the **UP** or **DOWN** button until **UNITS** is highlighted. The menu can be opened by pressing the **SET** button or by using the **Touchscreen**.

The **UNITS** submenu allows settings to be made for units or various values.

8.8.13.1 Distance

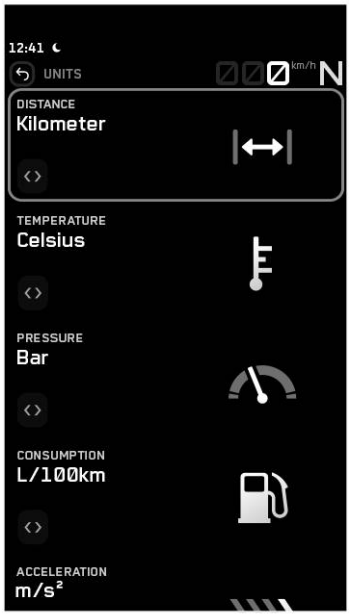

Condition: Motorcycle is stationary

– Press the **SET** button when the menu is closed or use the **Touchscreen**.

Note
If the **Splitscreen** is open, press and hold the **SET** button.

– Press the **UP** or **DOWN** button until **SETTINGS** is highlighted. The menu can be opened by pressing the **SET** button or by using the **Touchscreen**.
– Press the **UP** or **DOWN** button until **UNITS** is highlighted. The menu can be opened by pressing the **SET** button or by using the **Touchscreen**.
– Press the **UP**or **DOWN** button until **DISTANCE** is highlighted or use the **Touchscreen**.
– Use the **RIGHT** or **LEFT** button to navigate to the menu item and select the desired unit. Press the **SET** button to confirm the selection or use the **Touchscreen**.

Note
Kilometers or miles can be set.

8.8.13.2 Temperature

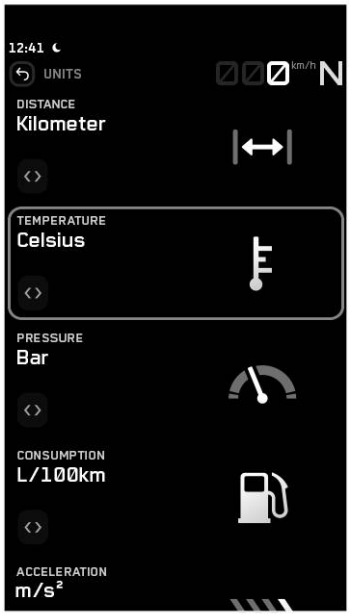

Condition: Motorcycle is stationary

– Press the **SET** button when the menu is closed or use the **Touchscreen**.

Note
If the **Splitscreen** is open, press and hold the **SET** button.

– Press the **UP** or **DOWN** button until **SETTINGS** is highlighted. The menu can be opened by pressing the **SET** button or by using the **Touchscreen**.
– Press the **UP** or **DOWN** button until **UNITS** is highlighted. The menu can be opened by pressing the **SET** button or by using the **Touchscreen**.
– Press the **UP**or **DOWN** button until **TEMPERATURE** is highlighted or use the **Touchscreen**.
– Use the **RIGHT** or **LEFT** button to navigate to the menu item and select the desired unit. Press the **SET** button to confirm the selection or use the **Touchscreen**.

Note
Celsius or Fahrenheit can be set.

8.8.13.3 Pressure

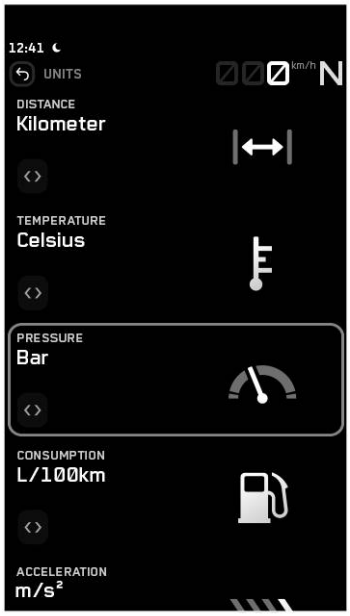

Condition: Motorcycle is stationary

– Press the **SET** button when the menu is closed or use the **Touchscreen**.

Note
If the **Splitscreen** is open, press and hold the **SET** button.

– Press the **UP** or **DOWN** button until **SETTINGS** is highlighted. The menu can be opened by pressing the **SET** button or by using the **Touchscreen**.
– Press the **UP** or **DOWN** button until **UNITS** is highlighted. The menu can be opened by pressing the **SET** button or by using the **Touchscreen**.
– Press the **UP**or **DOWN** button until **PRESSURE** is highlighted or use the **Touchscreen**.
– Use the **RIGHT** or **LEFT** button to navigate to the menu item and select the desired unit. Press the **SET** button to confirm the selection or use the **Touchscreen**.

Note
You can set it to bar or PSI.

8.8.13.4 Utilization

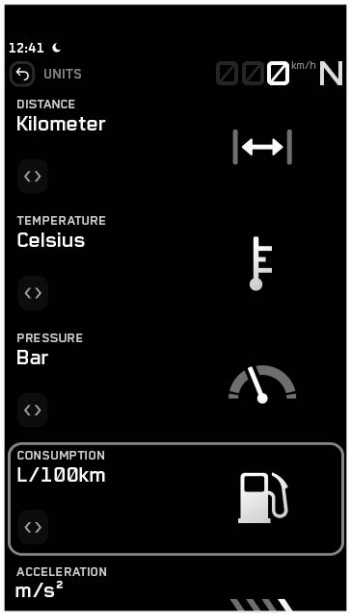

Condition: Motorcycle is stationary

– Press the **SET** button when the menu is closed or use the **Touchscreen**.

Note
If the **Splitscreen** is open, press and hold the **SET** button.

– Press the **UP** or **DOWN** button until **SETTINGS** is highlighted. The menu can be opened by pressing the **SET** button or by using the **Touchscreen**.
– Press the **UP** or **DOWN** button until **UNITS** is highlighted. The menu can be opened by pressing the **SET** button or by using the **Touchscreen**.
– Press the **UP**or **DOWN** button until **CONSUMPTION** is highlighted or use the **Touchscreen**.
– Use the **RIGHT** or **LEFT** button to navigate to the menu item and select the desired unit. Press the **SET** button to confirm the selection or use the **Touchscreen**.

Note
You can set it to l/100 km, km/l, USG/100 mi, mi/USG, mi/l, l/100 mi, UKG/100 mi or mi/UKG.

8.8.13.5 Acceleration

Condition: Motorcycle is stationary

– Press the **SET** button when the menu is closed or use the **Touchscreen**.

> **Note**
> If the **Splitscreen** is open, press and hold the **SET** button.

– Press the **UP** or **DOWN** button until **SETTINGS** is highlighted. The menu can be opened by pressing the **SET** button or by using the **Touchscreen**.
– Press the **UP** or **DOWN** button until **UNITS** is highlighted. The menu can be opened by pressing the **SET** button or by using the **Touchscreen**.
– Press the **UP**or **DOWN** button until **ACCELERATION** is highlighted or use the **Touchscreen**.
– Use the **RIGHT** or **LEFT** button to navigate to the menu item and select the desired unit. Press the **SET** button to confirm the selection or use the **Touchscreen**.

> **Note**
> You can set it to m/s² or ft/s².

8.8.14 Language

Condition: Motorcycle is stationary

– Press the **SET** button when the menu is closed or use the **Touchscreen**.

> **Note**
> If the **Splitscreen** is open, press and hold the **SET** button.

– Press the **UP** or **DOWN** button until **SETTINGS** is highlighted. The menu can be opened by pressing the **SET** button or by using the **Touchscreen**.
– Press the **UP** or **DOWN** button until **LANGUAGE** is highlighted or use the **Touchscreen**.
– Use the **RIGHT** or **LEFT** button to set the desired language. Press the **SET** button to confirm the selection or use the **Touchscreen**.

> **Note**
> The menu languages are US English, UK English, German, Italian, French, and Spanish.

8.8.15 Heating setup

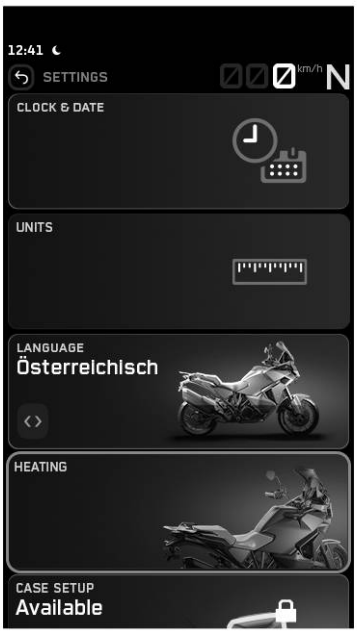

Condition: Motorcycle is stationary

– Press the **SET** button when the menu is closed or use the **Touchscreen**.

> **Note**
> If the **Splitscreen** is open, press and hold the **SET** button.

– Press the **UP** or **DOWN** button until **SETTINGS** is highlighted. The menu can be opened by pressing the **SET** button or by using the **Touchscreen**.
– Press the **UP** or **DOWN** button until **HEATING** is highlighted. The menu can be opened by pressing the **SET** button or by using the **Touchscreen**.

The grip heater (optional) and front rider's seat heating (optional) can be configured in **Heating**.

8.8.15.1 heated grip (optional)

Condition: Model with grip heater, Motorcycle is stationary

– Press the **SET** button when the menu is closed or use the **Touchscreen**.

> **Note**
> If the **Splitscreen** is open, press and hold the **SET** button.

– Press the **UP** or **DOWN** button until **SETTINGS** is highlighted. The menu can be opened by pressing the **SET** button or by using the **Touchscreen**.
– Press the **UP** or **DOWN** button until **HEATING** is highlighted. The menu can be opened by pressing the **SET** button or by using the **Touchscreen**.
– Press the **UP** or **DOWN** button until **GRIPS** is marked. The sub-menu can be opened by pressing the **SET** button or by using the **Touchscreen**.
– Use the **RIGHT** or **LEFT** button to set whether the grip heater is available or unavailable. Press the **SET** button to confirm the selection or use the **Touchscreen**.

8.8.15.2 front rider's seat heating (optional)

Condition: Model with heated rider seat, Motorcycle is stationary

– Press the **SET** button when the menu is closed or use the **Touchscreen**.

> **Note**
> If the **Splitscreen** is open, press and hold the **SET** button.

– Press the **UP** or **DOWN** button until **SETTINGS** is highlighted. The menu can be opened by pressing the **SET** button or by using the **Touchscreen**.
– Press the **UP** or **DOWN** button until **HEATING** is highlighted. The menu can be opened by pressing the **SET** button or by using the **Touchscreen**.
– Press the **UP** or **DOWN** button until **RIDER SEAT** is marked. The sub-menu can be opened by pressing the **SET** button or by using the **Touchscreen**.
– Use the **RIGHT** or **LEFT** button to set whether the heated rider seat is available or unavailable. Press the **SET** button to confirm the selection or use the **Touchscreen**.

8.8.15.3 Passenger seat heating (optional)

Condition: Model with heated passenger seat, Motorcycle is stationary

– Press the **SET** button when the menu is closed or use the **Touchscreen**.

> **Note**
> If the **Splitscreen** is open, press and hold the **SET** button.

– Press the **UP** or **DOWN** button until **SETTINGS** is highlighted. The menu can be opened by pressing the **SET** button or by using the **Touchscreen**.
– Press the **UP** or **DOWN** button until **HEATING** is highlighted. The menu can be opened by pressing the **SET** button or by using the **Touchscreen**.
– Press the **UP** or **DOWN** button until **PILLION SEAT** is marked. The sub-menu can be opened by pressing the **SET** button or by using the **Touchscreen**.
– Use the **RIGHT** or **LEFT** button to set whether the heated passenger seat is available or unavailable. Press the **SET** button to confirm the selection or use the **Touchscreen**.

8.8.16 Case setup

Condition: Motorcycle is stationary

– Press the **SET** button when the menu is closed or use the **Touchscreen**.

> **Note**
> If the **Splitscreen** is open, press and hold the **SET** button.

– Press the **UP** or **DOWN** button until **SETTINGS** is highlighted. The menu can be opened by pressing the **SET** button or by using the **Touchscreen**.
– Press the **UP** or **DOWN** button until **CASE SETUP** is highlighted or use the **Touchscreen**.
– Use the **RIGHT** or **LEFT** button to set whether the case setup is available or unavailable. Press the **SET** button to confirm the selection or use the **Touchscreen**.

8.8.17 Anti relay attack

Condition: Motorcycle is stationary

– Press the **SET** button when the menu is closed or use the **Touchscreen**.

> **Note**
> If the **Splitscreen** is open, press and hold the **SET** button.

– Press the **UP** or **DOWN** button until **SETTINGS** is highlighted. The menu can be opened by pressing the **SET** button or by using the **Touchscreen**.
– Press the **UP** or **DOWN** button until **ANTI RELAY ATTACK** is highlighted or use the **Touchscreen**.
– Press the **LEFT** or **RIGHT** button to turn **Anti Relay Attack** on or off. Press the **SET** button to confirm the selection or use the **Touchscreen**.

When **Anti Relay Attack** is active, the key must first be pressed before the ignition is switched on.

8.8.18 Touchscreen

Condition: Motorcycle is stationary

– Press the **SET** button when the menu is closed or use the **Touchscreen**.

> **Note**
> If the **Splitscreen** is open, press and hold the **SET** button.

– Press the **UP** or **DOWN** button until **SETTINGS** is highlighted. The menu can be opened by pressing the **SET** button or by using the **Touchscreen**.
– Press the **UP** or **DOWN** button until **Touchscreen** is highlighted or use the **TOUCHSCREEN**.
– Press the **RIGHT** or **LEFT** button to set the function for **Touchscreen**. Press the **SET** button to confirm the selection or use the **Touchscreen**.

8.8.19 Factory setting

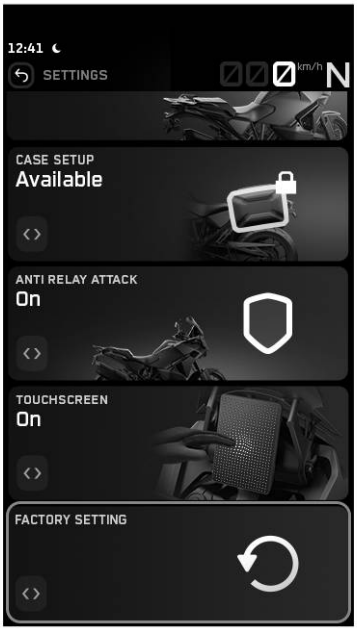

Condition: Motorcycle is stationary

– Press the **SET** button when the menu is closed or use the **Touchscreen**.

> **Note**
> If the **Splitscreen** is open, press and hold the **SET** button.

– Press the **UP** or **DOWN** button until **SETTINGS** is highlighted. The menu can be opened by pressing the **SET** button or by using the **Touchscreen**.
– Press the **UP** or **DOWN** button until **FACTORY SETTING** is highlighted or use the **Touchscreen**.
– Press the **SET** button or use **Touchscreen** to execute **Factory Reset**.

All settings are reset to the factory setting. For example, all **Trips**, all maps, all connections, and **Custom Ride Modes** will be deleted, and all ride modes will be reset.

> **Note**
> After **Factory Reset** there may be deviations in the **Range**. After a trip time of approx. 30 minutes, the **Range** is displayed correctly again.

9.1 Setting the front rider's seat

Preparatory work

– Remove the passenger seat. (p. 152)

Main work

– Select one of the following alternatives.

Lowering the rider's seat

– Attach the front rider's seat to the fuel tank at the recesses ❶, and push the front rider's seat down and forward at the same time.

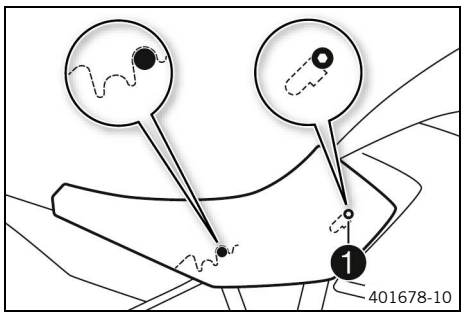

Raising the rider's seat

– Attach the front rider's seat to the fuel tank at the recesses ❶, and push the rider's seat up and forward at the same time.
– Check that the front rider's seat is mounted correctly.

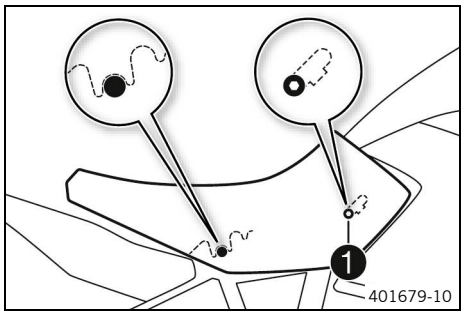

Reworking

– Mount the passenger seat. (p. 153)

9.2 Handlebar position

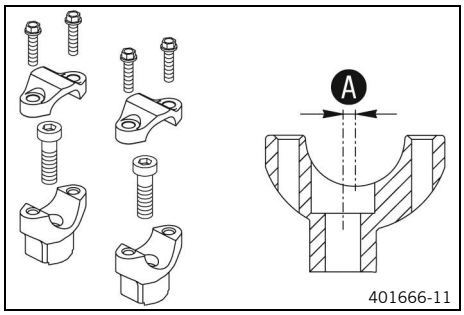

The holes on the handlebar supports are placed at a distance of Ⓐ from the center.

Hole distance Ⓐ	3.5 mm (0.138 in)

The handlebar can be mounted in two different positions. In this way, the handlebar can be mounted in the position that is most comfortable for the rider.

9.3 Adjusting the handlebar position

WARNING

Danger of accidents A repaired handlebar poses a safety risk.

If the handlebar is bent or straightened, the material becomes fatigued. The handlebar may break as a result.

– Change the handlebar if the handlebar is damaged or bent.

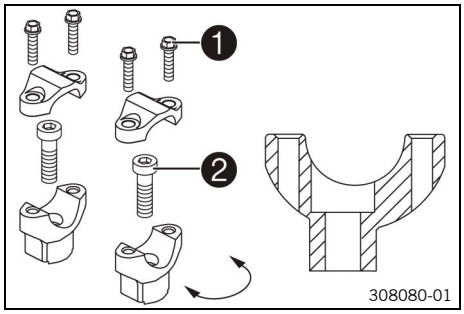

– Remove screws ❶. Take off the handlebar clamps. Remove the handlebar and lay it to one side.

Protect the components against damage by covering them.
Do not kink the cables or lines.

– Remove screws ❷. Take off the handlebar supports.
– Place the handlebar supports in the required position. Mount and tighten screws ❷.

Screw, handlebar mount	
M10×35	40 Nm (29.5 ft·lb$_f$) **Loctite® 243**

Note
Position the left and right handlebar supports evenly.

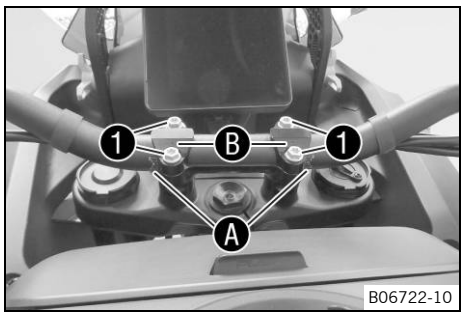

– Position the handlebar.

Make sure the cables and wiring are positioned correctly.

– Position the handlebar clamps. Mount screws ❶ and tighten evenly.

Handlebar clamp screw	
M8×25	20 Nm (14.8 ft·lb$_f$)

✓ Handlebar scale markings Ⓐ are located centrally between the handlebar clamps.
✓ Markings Ⓑ face backward.

Note
Make sure the installed gap widths are even.

9.4 Adjusting the windshield

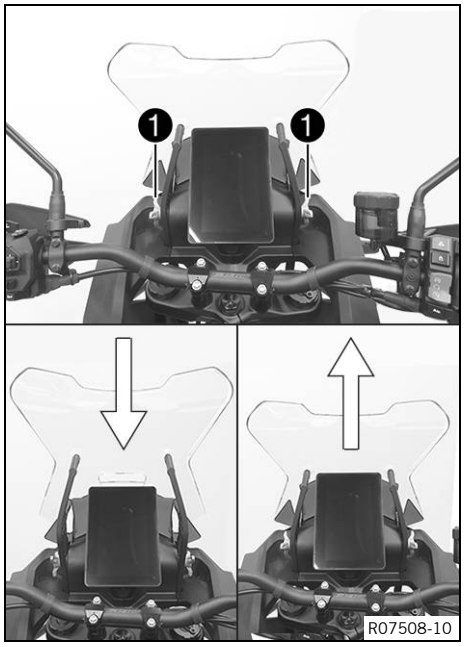

– Turn setting wheels ❶ to bring the windshield into the required position.

9.5 Adjusting the basic position of the clutch lever

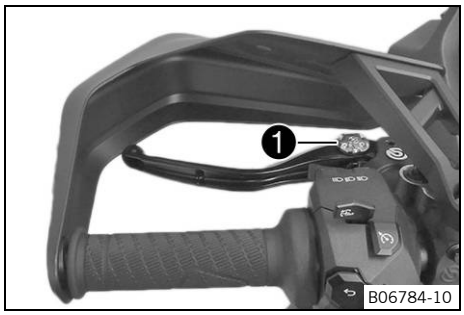

– Push clutch lever forward.
– Adjust the basic position of the clutch lever to your hand size by turning adjusting wheel ❶.

Only turn the adjusting wheel by hand; do not use force.
Do not make any adjustments while riding.

Note

Turn the setting wheel clockwise to increase the distance between the clutch lever and the handlebar.

Turn the setting wheel counterclockwise to decrease the distance between the clutch lever and the handlebar.

The range of adjustment is limited.

9.6 Adjusting the basic position of the hand brake lever

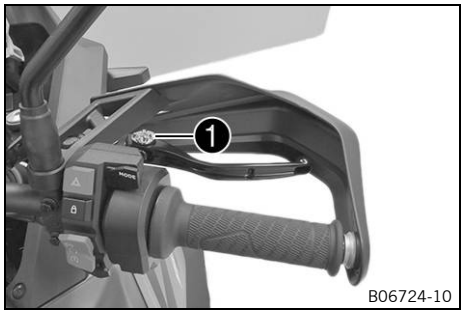

– Push the hand brake lever forward and turn the adjusting wheel.
– Adjust the basic position of the hand brake lever to your hand size by turning adjusting wheel ❶.

Only turn the adjusting wheel by hand; do not use force.
Do not make any adjustments while riding.

Note

Turn the adjusting wheel clockwise to increase the distance between the hand brake lever and the handlebar.

Turn the adjusting wheel counterclockwise to decrease the distance between the hand brake lever and the handlebar.

The range of adjustment is limited.

9.7 Checking the basic position of the gear shift lever

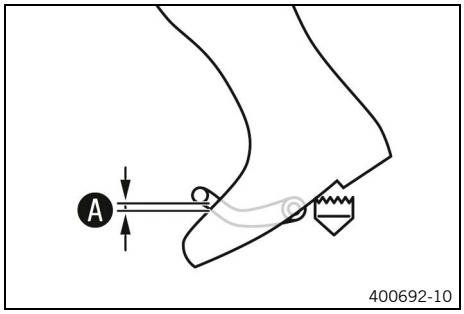

– Sit on the vehicle in the riding position and measure the distance A between the upper edge of your boot and the shift lever.

Distance between the gear shift lever and upper edge of boot	10 mm … 20 mm (0.39 in … 0.79 in)
When driving, the gear shift lever must not touch the rider's boot when in the basic position.	

Note

If the shift lever is permanently touching the boot, the transmission will be subject to excessive load; this can cause a malfunction of the quickshifter.

» If the distance does not meet the specifications:

– Adjust the basic position of the gear shift lever. (p. 130)

9.8 Adjusting the basic position of the gear shift lever

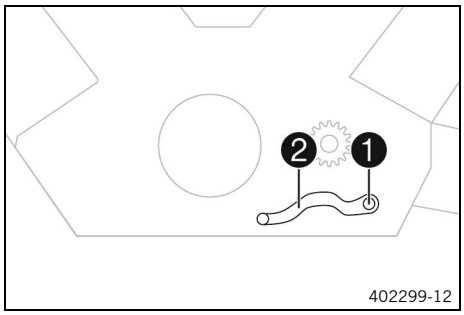

– Remove screws 1 with the washers and remove gear shift lever 2.

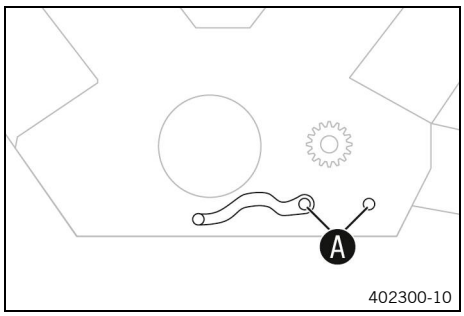

– Clean toothing Ⓐ of the gear shift lever and shift shaft.
– Mount the gear shift lever on the shift shaft in the desired position and engage the toothing.

The gear shift lever must not come into contact with any other vehicle components during the shift procedure.

Note
The range of adjustment is limited.

– Mount and tighten screw ❶ with the washers.

Screw, shift lever	
M6	18 Nm (13.3 ft·lb$_f$)

9.9 Setting the shift lever stub

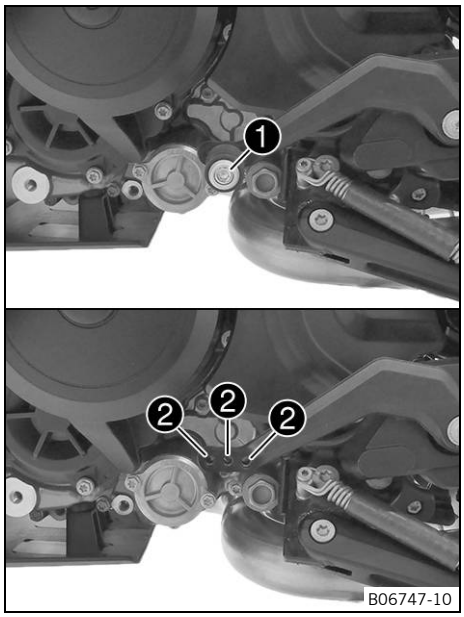

– Remove screw ❶ along with the shift lever stub.
– Position the shift lever stub with the screw in one of drilled holes ❷ depending on the desired lever length.

Standard	Middle hole

– Tighten the screw.

Remaining screws on chassis	
M6	10 Nm (7.4 ft·lb$_f$)

9.10 Adjusting the basic position of the brake pedal

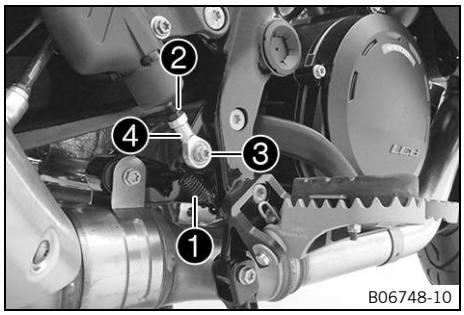

– Detach spring ❶.
– Loosen nut ❷.
– Remove screw ❸.
– To adjust the basic position of the foot brake lever to individual requirements, turn ball joint ❹ accordingly.

The screw must be screwed into the ball joint by at least 5 turns.

Note
The range of adjustment is limited.

– Hold ball joint ❹ and tighten nut ❷.

Remaining nuts on chassis	
M6	10 Nm (7.4 ft·lb$_f$)

– Mount and tighten screw ❸.

Screw, brake cylinder on brake lever	
M6×20	10 Nm (7.4 ft·lb$_f$) **Loctite® 243**

– Attach spring ❶.

10.1 Notes on preparing for first use

DANGER
Danger of accidents A rider who is not fit to ride poses a danger to themself and to others.
– Do not operate the vehicle if you are not fit to ride due to alcohol, drugs, or medication.
– Do not operate the vehicle if you are physically or mentally incapable of doing so.

WARNING
Danger of accidents The brake system fails in the event of overheating.
If the brake pedal is not released, the brake pads grind continuously.
– Take your foot off the brake pedal when you are not braking.

WARNING
Danger of accidents Non-approved or non-recommended tyres and wheels impact the handling characteristic.
– Only use tires and wheels approved and recommended by the vehicle manufacturer with the corresponding speed rating.

WARNING
Danger of accidents New tires have reduced road grip.
The contact surface on new tires is not yet roughened.
– Run in new tires with moderate riding and only gradually increase the lean angle.

Run-in distance	200 km (124.3 mi)

WARNING
Danger of accidents Different tire profiles on the front and rear wheels can make it more difficult to control the vehicle.
– Make sure that only tires of the same tread type are mounted to the front and rear wheel.

WARNING
Risk of injury Missing or inadequate protective clothing increases the risk of injury.
– Wear appropriate protective clothing such as helmet, boots, gloves as well as pants and a jacket with protectors on all rides.
– Always wear protective clothing that is in good condition and meets the legal regulations.

Note
When using the vehicle, remember that others may feel disturbed by excessive noise.

– Ensure that the pre–delivery inspection has been carried out by an authorized contractual partner.
  ✓ The delivery certificate is transferred upon vehicle handover.
– Read the entire owner's manual before riding for the first time.
– Get to know the controls.
– Adjust the motorcycle to suit your needs, as described in the Ergonomics chapter.
– Get used to the handling characteristics of the motorcycle on suitable terrain before undertaking a more challenging ride. Also, ride as slowly as possible to get a better feeling for the motorcycle.
– Hold the handlebar firmly with both hands and keep your feet on the footpegs when riding.
– Run in the engine. (p. 134)

10.2 Running in the engine

– During the running-in time, do not exceed the specified engine speed.

Maximum engine speed	
During the first: 1,000 km (621.4 mi)	6,500 rpm (108.33 Hz)
After the first: 1,000 km (621.4 mi)	10,250 rpm (170.83 Hz)

– Vary rpm, gear and engine load.

Unless a dangerous situation arises, do not fully open throttle.

10.3 Loading the vehicle

WARNING
Fire hazard The hot exhaust system may burn luggage.
– Fasten your luggage in such a way that it cannot be burned or singed by the hot exhaust system.

WARNING
Danger of accidents A high payload alters the handling characteristic and increases the stopping distance.
– Adapt your speed to your payload.

WARNING
Danger of accidents Carrying luggage alters handling characteristics.
– Adapt your speed to your payload.
– Ride more slowly if your vehicle is loaded with cases or other luggage.

Maximum speed with luggage	150 km/h (93.2 mph)

WARNING
Danger of accidents Items of luggage that have slipped or are incorrectly fastened can obscure the lighting system.
– Check that your luggage is fixed properly at regular intervals.
– Make sure that the lighting system is not covered by luggage.

WARNING
Danger of accidents Total weight and axle loads influence the handling characteristic.
The total weight consists of: operational vehicle with a full tank, rider and, if applicable, a passenger with protective clothing and helmet, and, if applicable, mounted luggage.
– Do not exceed the maximum permissible total weight or the axle loads.

WARNING
Danger of accidents Improper mounting of cases, tank rucksacks or other luggage impairs the handling characteristics.
Luggage mounted incorrectly can slip while the vehicle is in motion.
– Mount and secure all luggage according to the manufacturer's instructions.
– Check that your luggage is fixed properly at regular intervals.

WARNING

Danger of accidents The luggage system will be damaged if it is overloaded.

– Read the manufacturer information on maximum payload when mounting cases.

– If luggage is carried, ensure it is fixed firmly as close as possible to the center of the vehicle and ensure even weight distribution between the front and rear wheels.

The maximum permissible total weight and the maximum permissible axle loads must not be exceeded.	
Maximum permissible total weight	475 kg (1,047.2 lb)
Maximum permissible front axle load	175 kg (385.8 lb)
Maximum permissible rear axle load	300 kg (661.4 lb)

11.1 Checks and maintenance measures when preparing for use

Note
Before every trip, check the condition of the vehicle and ensure that it is roadworthy.
The vehicle must be in perfect technical condition when it is being operated.

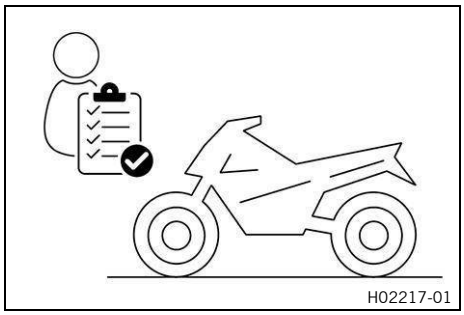

- Check the engine oil level. (p. 201)
- Check the brake fluid level for the front brake. (p. 165)
- Check the brake fluid level for the rear brake. (p. 168)
- Check that the brake pads of the front brake are secured. (p. 167)
- Check that the brake pads of the rear brake are secured. (p. 170)
- Check that the brake system is functioning properly.
- Check the coolant level in the compensating tank. (p. 196)
- Check the chain for dirt. (p. 154)
- Check the chain tension. (p. 155)
- Check the tire condition. (p. 177)
- Check the tire pressure. (p. 178)
- Check the settings of all controls and ensure that they can be operated smoothly.
- Check that the electrical equipment is functioning properly.
- Check that luggage is properly secured.
- Check the setting of the rear mirror.
- Check the fuel level.

11.2 Starting

DANGER
Danger of poisoning Exhaust gases are toxic and inhaling them may result in unconsciousness and death.
- Always ensure that there is sufficient ventilation when running the engine.
- Use suitable exhaust extraction when starting or running the engine in an enclosed space.

WARNING
Danger of accidents Electronic components and safety devices will be damaged if the 12-V battery is discharged or missing.
If the 12-V battery is discharged or defective, malfunctions in the vehicle electronics can occur, especially when starting.
- Never operate the vehicle with a discharged 12-V battery or without a 12-V battery.

NOTE
Engine failure Running a cold engine at high engine speeds negatively impacts the service life of the engine.
- Always warm up the engine at low engine speeds.

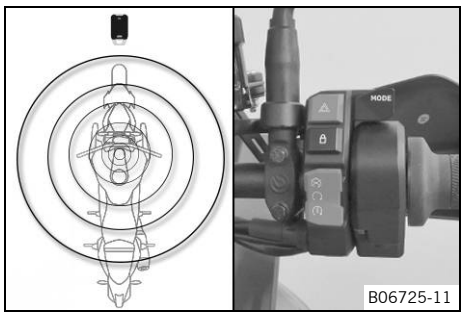

– Take the motorcycle off the side stand and sit on the motorcycle.
– Bring the RACE ON key within range of the antenna.

Note
If the anti-relay attack (p. 29) is activated, the button on the RACE ON key must be pressed for the RACE ON key to send a response signal.

– Ensure that the RACE ON key stays in range while riding.

Maximum range of the RACE ON key around the antenna	1.5 m (4 ft – 11.1 in)

Note
The range may be reduced by decreases in RACE ON key battery voltage and by interfering radio waves.
If the battery voltage of the RACE ON key is too low, one of the ignition keys must be held in the area of the antenna and must be safely stored again after starting.

– Make sure that the start button/kill switch is in the middle position ◯.
– Switch on ignition; to do this, briefly press the RACE ON button (maximum of 1 second).

To avoid malfunctions in the control unit communication, do not switch the ignition off and on in rapid succession.

✓ The steering is unlocked.
✓ The function check of the combination instrument is run.
✓ The **ABS** warning lamp goes out when starting off.

Note
If the steering does not unlock, move the handlebar slightly.

– Shift the transmission into the neutral position N.
✓ Green neutral indicator N lights up.

– Briefly press the start button/kill switch into lower position.

Only press the start button/kill switch into lower position when the dashboard function check has been completed.
Do not open the throttle to start.
If the starting attempt is unsuccessful, wait for 15 seconds before making another attempt at starting.
After 6 unsuccessful starting attempts, do not try again, and check the vehicle for faults instead.

Note
This motorcycle is equipped with a safety starting system. The engine can only be started if the transmission is in the neutral position. If the side stand is folded out and you shift into gear, the engine stops.

11.3 Starting off

– Pull the clutch lever, shift into first gear, release the clutch lever slowly and at the same time carefully open the throttle.

11.4 Quickshifter+ (optional)

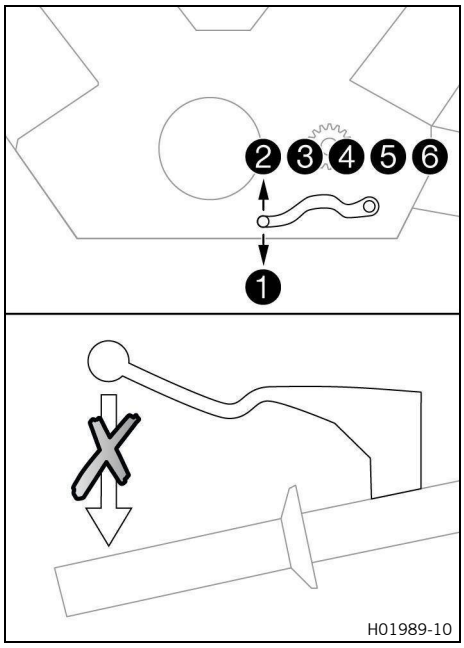

If the **QUICKSHIFTER+** (optional) is activated, you can shift up and down without actuating the clutch.

Because there is no need to close the throttle grip, uninterrupted gear shifts are possible.

The QUICKSHIFTER+ uses the shift shaft position to check whether or not a shift should be initiated, and sends a corresponding signal to the engine control unit.

If the QUICKSHIFTER+ is disabled in the combination instrument, the clutch needs to be actuated in the normal way for each shift.

11.5 Starting with HHC (optional)

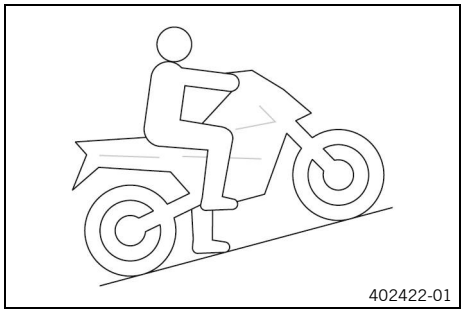

The **HHC** is an optional auxiliary function of the brake system.

The **HHC** prevents accidental rolling back of the motorcycle.

The **HHC** recognizes stopping on hills and automatically applies the brake.

The **HHC** recognizes stopping on gradients and can be manually activated by tapping the brakes.

The **HHC** can be manually activated and deactivated on hills and gradients by tapping the brakes.

Note
Tapping the brakes means briefly pressing the brake lever.

Either the front or rear brake can be tapped.

When driving off, the **HHC** releases the rear brake automatically.

Note
When the ignition is switched on, the **HHC** can still be active even if the engine is stopped.

To end the active **HHC**, the following options are available:

- Tap the brakes
- Wait 2 minutes
- Switch off the ignition
- Fold out the side stand

If the **HHC** does not detect a start off after 2 minutes, the braking force is automatically reduced gently.

Note
5 seconds before the time runs out, a takeover request is issued.

If a brake lever is actuated, the **HHC** is re-activated.
The **HHC** is triggered when the brakes are tapped, when the side stand is folded out, when the ignition is switched off or when the **HHC** is deactivated in the menu.
The **HHC** can be activated or deactivated on the dashboard.

11.6 Shifting, riding

WARNING
Risk of injury The passenger may fall from the vehicle if they act incorrectly.
– Ensure that the passenger sits correctly on the passenger seat, places his or her feet on the passenger foot pegs and holds on to the rider or the grab handles.

WARNING
Danger of accidents Not adapting the riding style constitutes a major risk.
– Comply with traffic regulations and ride defensively and with foresight to detect sources of danger as early as possible.

WARNING
Danger of accidents Total weight and axle loads influence the handling characteristic.
The total weight consists of: operational vehicle with a full tank, rider and, if applicable, a passenger with protective clothing and helmet, and, if applicable, mounted luggage.
– Do not exceed the maximum permissible total weight or the axle loads.

WARNING
Danger of accidents Improper mounting of cases, tank rucksacks or other luggage impairs the handling characteristics.
Luggage mounted incorrectly can slip while the vehicle is in motion.
– Mount and secure all luggage according to the manufacturer's instructions.
– Check that your luggage is fixed properly at regular intervals.

WARNING
Danger of accidents Adjustments to the vehicle distract attention from traffic activity.
– Make all adjustments when the vehicle is at a standstill.

WARNING
Danger of accidents Abrupt load alterations can cause the vehicle to become out of control.
– Avoid abrupt load alterations and sudden braking actions unless a hazardous situation arises.

WARNING
Danger of accidents Cold tires have reduced road grip.
– Ride the first miles carefully on every journey at moderate speed until the tires reach operating temperature.

WARNING

Danger of accidents New tires have reduced road grip.

The contact surface on new tires is not yet roughened.

– Run in new tires with moderate riding and only gradually increase the lean angle.

Run-in distance	200 km (124.3 mi)

WARNING

Danger of accidents A fall can damage the vehicle more seriously than it may first appear.

– Check the vehicle after a fall as you do when preparing for use.

WARNING

Danger of accidents If you downshift at high engine speed, the rear wheel blocks and the engine races.

– Do not downshift to a lower gear at high engine speeds.

NOTE

Engine failure Overheating damages the engine.

– If the coolant temperature warning is displayed, stop immediately and take care not to endanger yourself or other traffic participants in the process.
– Allow the engine and cooling system to cool down.
– Check and, if necessary, correct the coolant level on the cooling system while it is in a cooled state.

NOTE

Engine failure Unfiltered intake air has a negative effect on the service life of the engine.

Dust and dirt can enter the engine if there is no air filter or if the air filter is mounted incorrectly.

– Only operate the vehicle if an air filter is correctly fitted.

NOTE

Transmission damage Incorrect use of the QUICKSHIFTER+ will damage the transmission.

The QUICKSHIFTER+ can only be used if the function is enabled in the combination instrument.

The QUICKSHIFTER+ is not active if you pull the clutch lever.

– Only use the QUICKSHIFTER+ in the permitted speed range shown.

Note

If you hear unusual noises while riding, stop immediately, switch off the engine, and contact an authorized contractual partner.

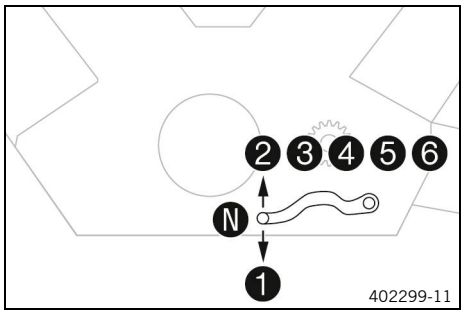

– Shift into a higher gear when conditions allow (incline, riding situation, etc.).
– Release the throttle while simultaneously pulling the clutch lever, shift into the next gear, release the clutch lever, and open the throttle.

Note

The gear positions can be seen in the figure. The neutral position is between the first and second gears. First gear is used for starting off or for steep inclines.

– After reaching maximum speed by fully opening the throttle twist grip, turn the throttle back so that it is ¾ open. This will reduce the speed slightly, but the fuel consumption will be considerably lower.
– Accelerate only up to a speed suitable for the road surface and weather conditions. In particular, you should not change gear on bends and should only accelerate very cautiously.

- Brake if necessary and close the throttle at the same time in order to shift down.
- Pull clutch lever and shift into a lower gear, release the clutch lever slowly, and open the throttle or shift again.
- If the engine stalls (e.g. at an intersection), just pull the clutch lever and press the start button. The transmission must not be shifted into neutral.
- Switch off the engine if you are likely to be running at idle speed or stationary for a long time.
- If oil pressure warning lamp lights up during a trip, stop as soon as it is safe to do so and switch off the engine. Contact an authorized contractual partner.
- If malfunction indicator lamp lights up during a trip, please contact an authorized contractual partner as soon as possible.
- If general warning light lights up during a trip, the display shows a message for 10 seconds.

Note
Very important messages are stored in the **Warning** menu.

- If ice warning appears on the dashboard, there may be black ice on the road surface. Adjust your speed to the road conditions.

Condition: QUICKSHIFTER+ (optional) is enabled

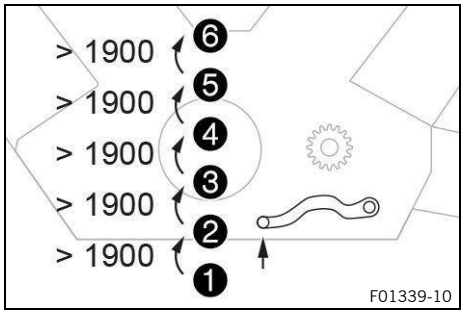

- If the **QUICKSHIFTER+** is enabled in the combination instrument, one can shift up in the engine speed range shown without pulling the clutch lever.

Pull the shift lever to the stop quickly without changing the throttle twist grip position.

Note
The minimum engine speed in rpm before shifting up is shown in the figure.

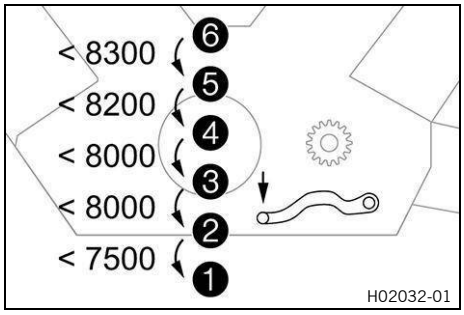

- If the QUICKSHIFTER+ is activated in the combination instrument, you can shift down in the engine speed range shown without pulling the clutch lever.

Press the shift lever to the stop quickly without changing the throttle twist grip position.

Note
The maximum engine speed in rpm before shifting down is shown in the figure.

11.7 MSR (optional)

Auxiliary function of the engine control, which prevents rear wheel locking with excessive engine braking effect, by lightly opening the throttle valve

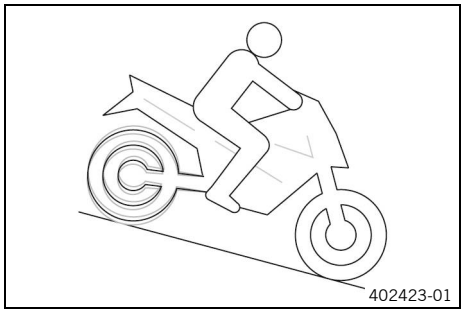

The **MSR** is an optional auxiliary function of the engine control.

If the engine braking effect is too great, the **MSR** prevents the rear wheel from locking or sliding away on a sloping position.

To avoid slip of the rear wheel, the **MSR** only opens the throttle valve as far as absolutely necessary.

The **MSR** is applied on surfaces, where the friction coefficient is to low to open the slipper clutch.

To further increase ride safety, the **MSR** is slope dependent.

Note

If **ABS** is disabled, **MTC** is disabled or ABS Mode **Offroad** is enabled, the **MSR** is not active.

11.8 Braking

WARNING

Danger of accidents A spongy pressure point on the front or rear brake reduces the brake action.

– Do not drive the vehicle if the brake system has a spongy pressure point.

WARNING

Danger of accidents The brake system fails in the event of overheating.

If the brake pedal is not released, the brake pads grind continuously.

– Take your foot off the brake pedal when you are not braking.

WARNING

Danger of accidents Braking with excessive force locks the wheels.

The ABS effectiveness is only ensured if it is switched on.

– Leave the ABS switched on in order to benefit from the protective effect.

WARNING

Danger of accidents Moisture and dirt impair the brake system.

– Brake carefully several times to dry out and remove dirt from the brake pads and the brake discs.

WARNING

Danger of accidents Salt on the roads impairs the brake system.

– Brake carefully several times to remove salt from the brake linings and the brake discs.

WARNING

Danger of accidents ABS may increase the stopping distance in certain situations.

– Adapt your braking to the riding situation and the road conditions.

WARNING

Danger of accidents Higher total weight increases the stopping distance.

– Take the longer stopping distance into account when carrying a passenger or luggage with you.

WARNING
Danger of accidents Driving aids can reduce the probability of a fall only within physical limits.
It is not always possible to compensate for certain riding situations, for example with luggage loaded with a high center of gravity, varying road surfaces, steep descents or full braking without disengaging the gear.
– Adapt your riding style to the road conditions and your driving ability.

– When braking, release the throttle and apply the front and rear brakes at the same time.

Note
When the **ABS** is enabled, maximum braking power can be applied even on surfaces with low road grip such as sandy, wet, or slippery terrain without the danger of the wheels locking.
If driving aids, e.g. the cruise control system or **MSC** have initiated or supported a braking maneuver, the brake lever pressure point may change slightly during the next braking maneuver due the system.
The performance and function of the brake system are not impaired by this.

WARNING
Danger of accidents The rear wheel can lock due to the engine braking effect.
– Pull the clutch when performing emergency braking or braking on slippery surfaces.

WARNING
Danger of accidents Banked or laterally sloping ground reduces the maximum possible delay.
– If possible finish braking before going into a bend.

– Always finish braking before you go into a bend. Shift into a lower gear that suits the speed.
– Use the brake action of the engine on long downhill stretches. To do so, shift back one or two gears, but do not overrev the engine. This means that significantly less braking is required and means the brake system does not overheat.

11.9 Stop, park

WARNING
Risk of injury People who act without authorization endanger themselves and others.
If a valid transponder is in range, the vehicle can be started.
– Never leave the vehicle unattended while the engine is running.
– Never leave the vehicle unattended if a transponder is in the vicinity of the vehicle.
– Lock the steering if you leave the vehicle unattended.

WARNING
Danger of burns Some vehicle components become hot when the vehicle is operated.
– Do not touch any parts such as the exhaust system, radiator, engine, damper, or brake system before the vehicle parts have cooled down.
– Allow the vehicle parts to cool down before performing any work on the vehicle.

NOTE
Fire hazard Hot vehicle components pose a fire hazard and explosion risk.
– Do not park the vehicle near materials which are highly flammable or explosive.
– Allow the vehicle to cool down before covering it.

NOTE
Material damage The vehicle may be damaged if parked incorrectly.
Damage can occur if the vehicle rolls away or falls over.
The components for parking the vehicle are designed only for the weight of the vehicle.
– Park the vehicle on a firm and level surface.

– Make sure that nobody sits on the vehicle when it is parked on a stand.

– Brake the motorcycle.
– Shift the transmission into the neutral position N.
– Switch off ignition – to do this, briefly press RACE ON button (maximum of 1 second) with the ignition switched on.

Note
If the engine is switched off with the emergency OFF switch and the ignition remains switched on using the RACE ON button, the power supply to most electrical power consumers remains uninterrupted. This discharges the 12-V battery. You should therefore always switch off the engine with the RACE ON button – the emergency OFF switch is intended for emergencies only.

– Park the motorcycle on a firm surface.
– Swing side stand forward with your foot as far as it will go and lean the vehicle on it.
– Move handlebar fully to the left and press and hold RACE ON button (at least 2 seconds).
✓ The steering is locked.

Note
If the steering lock does not engage, move the handlebar slightly.

11.10 Transportation

NOTE
Fire hazard Hot vehicle components pose a fire hazard and explosion risk.
– Do not park the vehicle near materials which are highly flammable or explosive.
– Allow the vehicle to cool down before covering it.

NOTE
Material damage The vehicle may be damaged if parked incorrectly.
Damage can occur if the vehicle rolls away or falls over.
The components for parking the vehicle are designed only for the weight of the vehicle.
– Park the vehicle on a firm and level surface.
– Make sure that nobody sits on the vehicle when it is parked on a stand.

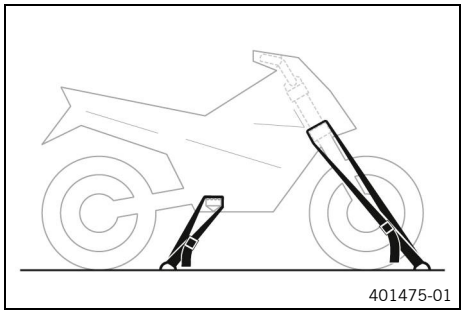

– Switch off the engine.
– Use tension belts or other suitable devices to secure the motorcycle against falling over or rolling away.

11.11 Towing in the event of a breakdown

NOTE

Danger of damage Damage to the powertrain and transmission can occur when towing with a towing vehicle.

- Do not use towing equipment where the wheels of the broken down vehicle remain on the road and rotate as it is towed.
- Always transport a broken down vehicle on a trailer or on the loading area of a transport vehicle.

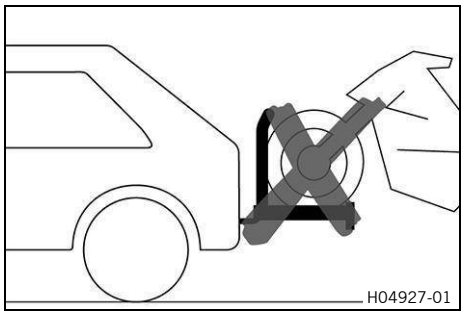

- Ensure that the broken down vehicle is properly secured on the trailer or transport vehicle.
- Observe local regulations for the recovery of broken down vehicles.

11.12 Refueling

DANGER

Fire hazard Fuel is highly flammable.

The fuel in the fuel tank expands when warm and can escape if overfilled.

- Do not refuel the vehicle in the vicinity of open flames, glowing, or smoldering objects.
- Make sure that nobody smokes in the vicinity of the vehicle during the refueling process.
- Switch off the engine for refueling.
- Make sure that no fuel is spilled; particularly not on hot parts of the vehicle.
- If any fuel is spilled, wipe it up immediately.
- Do not overfill the fuel tank.

WARNING

Danger of poisoning Fuel is harmful to health.

- Do not allow fuel to come into contact with skin, eyes, or clothing.
- Consult a doctor immediately if fuel has been ingested.
- Do not inhale fuel vapors.
- Rinse the affected area immediately with plenty of water in the event of contact with skin.
- Rinse eyes thoroughly with water and consult a doctor immediately if fuel comes into contact with eyes.
- If fuel spills on to your clothing, change the clothing.
- Store fuel properly in a suitable container and keep out of the reach of children.

NOTE

Material damage Inadequate fuel quality can lead to losses in performance and consequential damage.

- Refuel only with clean fuel that meets the specified standards.

NOTE

Environmental hazard Improper handling of fuel is dangerous to the environment.

- Do not allow fuel to enter the groundwater, the soil, or the sewage system.

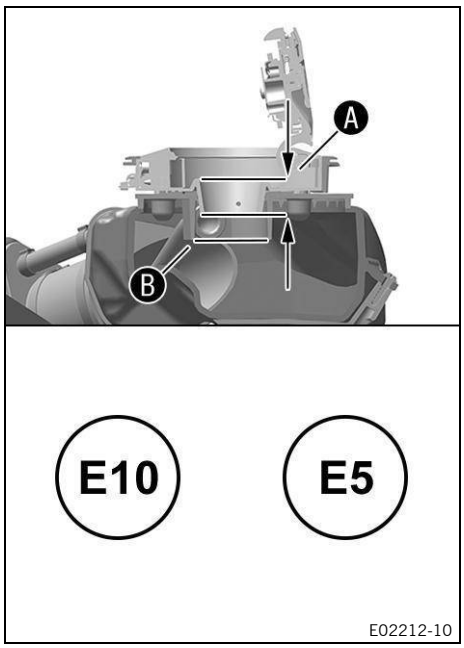

– Switch off the engine.
– Open the fuel tank cap. (p. 31)
– Only insert the fuel nozzle to the specified dimension.

Level A	2.5 cm (0.98 in)

– Fill the fuel up to the maximum level at lower edge B of the filler neck.

After filling up to the lower edge of the filler neck for the first time, do not refuel again.

Total fuel tank capacity, approx.	
Super unleaded (ROZ 95) (p. 236)	23 l (6.1 liq. gal_{US})

Note

After the first filling, the contents of the reservoir slowly flows into the fuel tank.

If refueling is performed again after draining, the fuel tank will overfill and the evaporative canister will be destroyed.

– Close the fuel tank cap. (p. 32)

12.1 Service work

Any further work that results from the service work must be ordered separately and invoiced separately.
Different service intervals may apply in your country, depending on the local operating conditions.
Individual service intervals and scopes may change in the course of technical developments. The most up-to-date service schedule is available for authorized contractual partners for the electronic proof of service. Your authorized contractual partner will be happy to advise you.

	After 1,000 km (621.4 mi)	Every 15,000 km (9,320.6 mi)	Every 30,000 km (18,641.1 mi)	Every 60,000 km (37,282.3 mi)	Every 12 months	Every 24 months	Every 48 months
Read out the fault memory using the diagnostics tool.	○	●	●	●	●	●	●
Check that the electrical equipment is functioning properly.	○	●	●	●	●	●	●
Check that the brake pads of the front brake are secured. (p. 167)	○	●	●	●	●	●	●
Check that the brake pads of the rear brake are secured. (p. 170)	○	●	●	●	●	●	●
Check the brake discs. (p. 165)	○	●	●	●	●	●	●
Check the brake lines for damage and tightness.	○	●	●	●	●	●	●
Check the brake fluid level for the front brake. (p. 165)	○	●	●	●	●		
Change the brake fluid for the front brake.						●	●
Check the brake fluid level for the rear brake. (p. 168)	○	●	●	●	●		
Change the brake fluid for the rear brake.						●	●
Check/correct the fluid level of the hydraulic clutch. (p. 158)		●	●	●	●		
Change the hydraulic clutch fluid.						●	●
Change the engine oil and the oil filter, clean the oil screens. (p. 201)	○	●	●	●	●	●	●
Check/clean the oil nozzle for clutch lubrication.	○	●	●	●			
Check all hoses (e.g. fuel, cooling, bleeder, drainage, etc.) and boots for cracking, leaks, and correct routing.		●	●	●	●	●	●
Empty the drainage hoses.	○	●	●	●	●	●	●
Check the cables for damage and that there are no kinks in the routing.		●	●	●	●	●	●
Check the frame.			●	●			
Check the swingarm.			●	●			
Check the swingarm bearing for play.		●	●	●			
Check the steering head bearing play.	○	●	●	●	●	●	●
Check the wheel bearing for play.		●	●	●			
Check the shock absorber and fork for leaks. Perform a fork service and shock absorber service as needed, when possible and depending on how the vehicle is used.	○	●	●	●	●	●	●
Check the tire condition. (p. 177)	○	●	●	●	●	●	●
Check the tire pressure. (p. 178)	○	●	●	●	●	●	●

	After 1,000 km (621.4 mi)	Every 15,000 km (9,320.6 mi)	Every 30,000 km (18,641.1 mi)	Every 60,000 km (37,282.3 mi)	Every 12 months	Every 24 months	Every 48 months
Check the chain, rear sprocket, and engine sprocket. (p. 157)		●	●	●	●	●	●
Check the chain tension. (p. 155)	○	●	●	●	●	●	●
Grease all moving parts (e.g. side stand, hand lever, chain, etc.) and check for smooth operation.	○	●	●	●	●	●	●
Change the spark plugs (incl. removing fuel tank).			●	●			
Check the valve clearance (fuel tank and spark plugs removed).				●			
Change the air filter, clean the air filter box.		●	●	●			
Change the SAS diaphragm valves.				●			
Check the fuel pressure.		●	●	●	●	●	●
Check the headlight setting. (p. 190)	○	●	●	●			
Check the tightness of the safety-relevant screws and nuts which are easily accessible.	○	●	●	●	●	●	●
Clean the dust boots of the fork legs. (p. 162)		●	●	●			
Check that the radiator fan is functioning properly.	○	●	●	●	●	●	●
Check the coolant level in the compensating tank. (p. 196)	○	●	●	●	●	●	
Checking the antifreeze.	○	●	●	●	●	●	
Change the coolant.							●
Final check: Check the vehicle is roadworthy and take a test ride.	○	●	●	●	●	●	●
Read out the fault memory after the test ride using the diagnostics tool.	○	●	●	●	●	●	●
Set the service interval display.	○	●	●	●	●	●	●
Enter the electronic proof of service in the contractual partner portal.	○	●	●	●	●	●	●

○ One-time interval

● Periodic interval

13.1 Fork/shock absorber

Semi-active suspension **WP Semi–active Suspension** can be used to tune the suspension individually without the use of tools.

Electronic suspension setting **WP Semi–active Suspension** constantly regulates the damping behavior of the suspension taking into account various sensor data.

As a result, the electronic damping valves are matched to the current driving situation and terrain characteristics as well as the settings made by the rider in the **Preload Adjuster** and **Suspension Mode** menus.

Always adapt the suspension to your riding style and the payload.

In the **Preload Adjuster** menu, the suspension can be set to the loading condition.

In the **Suspension Mode** menu, the damping behavior of the suspension can be set.

13.2 Preload adjuster

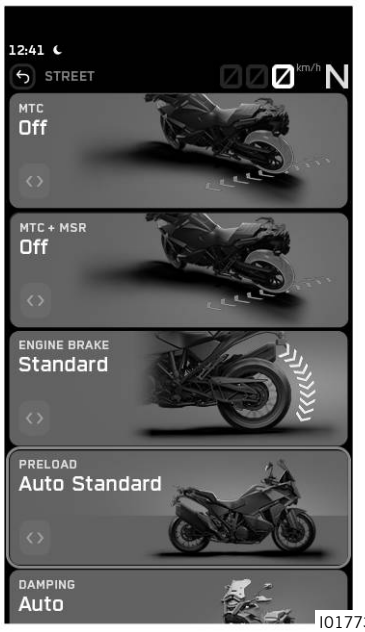

I01773-01

Condition	Meaning
0%–20%	Setting for rides without luggage and a passenger and a rider's weight up to 75 kg.
30%	Setting for rides without luggage and a passenger and a rider's weight up to 85 kg.
40%	Setting for rides without luggage and a passenger and a rider's weight up to 95 kg.
50%–60%	Setting for rides with luggage, but without a passenger.
70%–80%	Setting for rides with a passenger, but without luggage.
90%–100%	Setting for rides with a passenger and luggage.
Low (optional)	Automatic adjustment of the spring preload for a lot of sag on the rear wheel and therefore a low seat height and low riding geometry.
Standard (optional)	Automatic adjustment of the spring preload, standard sag on the rear wheel and standard riding geometry.
High (optional)	Automatic adjustment of the spring preload for a little sag on the rear wheel and therefore a slightly higher seat height and sportier riding geometry.

Note
Only make adjustments on the preload adjuster if the rear wheel is loaded.

The spring preload can be adjusted to the load in the **Preload Adjuster** menu. 21 manual settings (0% to 100%) and 3 automatic settings **Low** (optional), **Standard** (optional) and **High** (optional) are available.

The rebound setting is automatically adapted to the payload detected by the system.

Note

Due to high electricity consumption, it is recommended that the preload adjuster is only set when the engine is running.

The manual settings given are guidelines and depend on the load.

High loads require a higher spring preload.

Low loads require a lower spring preload.

In automatic settings **Low** (optional), **Standard** (optional) and **High** (optional) the spring preload is automatically adjusted to the load detected by the system during the journey.

In the **Low** (optional), **Standard** (optional) and **High** (optional) automatic settings, it is possible that no adjustment of the spring preload can be detected when stationary.

The most recently selected rebound adjustment is shown on the display.

Note

The symbol of the last setting flashes until the new setting is adopted.

13.3 Suspension Mode

I01771-01

Condition	Meaning
Auto (optional)	Tuning of the suspension components is automatically adjusted to the riding style of the rider
Rain (optional)	Soft tuning of the suspension components with good feedback from the chassis
Sport	Tight tuning of the suspension components with very direct feedback from the chassis
Street	Normal tuning of the suspension components with direct feedback from the chassis
Comfort	Soft tuning of the suspension components with good feedback from the chassis
Offroad (optional)	Tight tuning of the suspension components with very direct feedback from the chassis
Pro (optional)	The tuning of the suspension components can be individually configured in menu **Pro**.

Various settings for the damping of the suspension components can be selected in the **Suspension Mode** menu. The settings **Sport**, **Street**, **Comfort**, **Auto** (optional), **Rain** (optional), **Offroad** (optional) and **Pro** (optional) are available.

14.1 Raising the motorcycle with rear lifting gear

NOTE

Material damage The vehicle may be damaged if parked incorrectly.
Damage can occur if the vehicle rolls away or falls over.
The components for parking the vehicle are designed only for the weight of the vehicle.
– Park the vehicle on a firm and level surface.
– Make sure that nobody sits on the vehicle when it is parked on a stand.

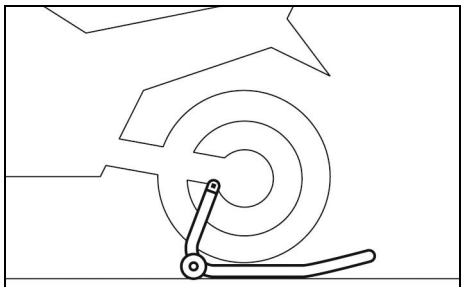

– Mount retaining adapter on the link fork.
– Insert the adapter in the rear wheel stand.

Retaining adapter (61029955144)
Rear wheel work stand (69329955000)

– Stand motorcycle upright, align lifting gear to the link fork with the adapters, and raise motorcycle.

14.2 Removing the rear of the motorcycle from the lifting gear

NOTE

Material damage The vehicle may be damaged if parked incorrectly.
Damage can occur if the vehicle rolls away or falls over.
The components for parking the vehicle are designed only for the weight of the vehicle.
– Park the vehicle on a firm and level surface.
– Make sure that nobody sits on the vehicle when it is parked on a stand.

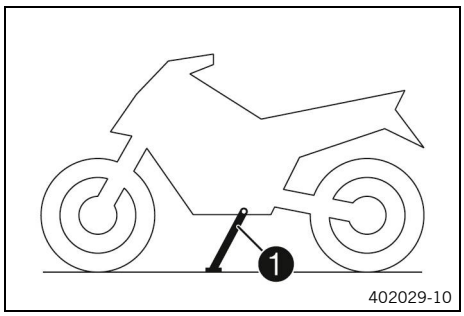

– Secure the motorcycle against falling over.
– Remove the rear lifting gear and lean the vehicle on side stand ❶.
– Remove the retaining adapter from the link fork.

14.3 Lifting the motorcycle with the front lifting gear

NOTE

Material damage The vehicle may be damaged if parked incorrectly.
Damage can occur if the vehicle rolls away or falls over.
The components for parking the vehicle are designed only for the weight of the vehicle.
– Park the vehicle on a firm and level surface.
– Make sure that nobody sits on the vehicle when it is parked on a stand.

Preparatory work

– Raise the motorcycle with the rear lifting gear. (p. 151)
– Remove the front top fender. (p. 161)

Main work

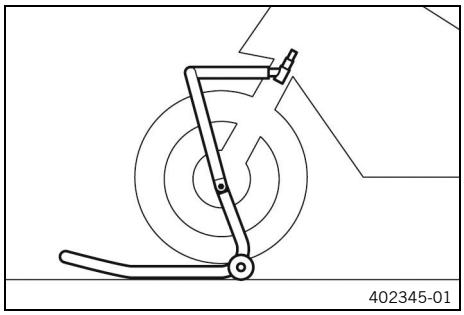

– Move the handlebar to the straight-ahead position.
– Use suitable lifting gear when attaching the steering stem.
– Align the front lifting gear with the fork legs.

Always raise the motorcycle at the rear first.

– Lift the motorcycle at the front.

14.4 Taking the motorcycle off the front lifting gear

NOTE

Material damage The vehicle may be damaged if parked incorrectly.
Damage can occur if the vehicle rolls away or falls over.
The components for parking the vehicle are designed only for the weight of the vehicle.
– Park the vehicle on a firm and level surface.
– Make sure that nobody sits on the vehicle when it is parked on a stand.

Main work

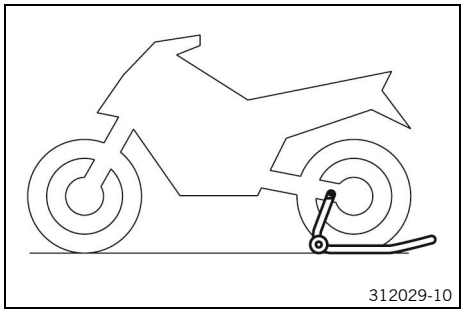

– Secure the motorcycle against falling over.
– Remove the front lifting gear.

Reworking

– Install the front top fender. (p. 161)

14.5 Removing the passenger seat

Condition: Motorcycle is stationary, Ignition is switched on or has been switched off for less than 1 minute

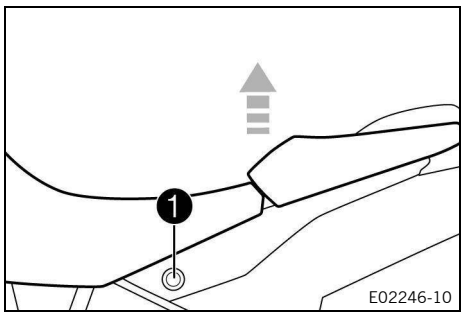

– Press seat release button ❶.
– Raise the front of the passenger seat, pull it toward the fuel tank and remove upward.

14.6 Mounting the passenger seat

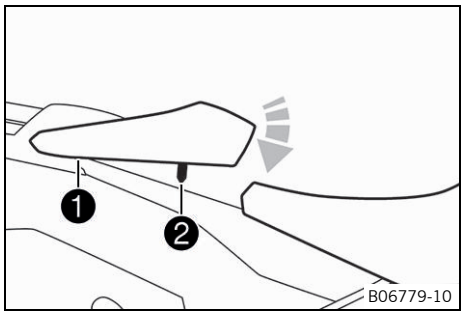

– Attach hooks ❶ on the passenger seat to the hanger on the subframe.

Ensure that the seat heating cable is correctly routed.

– Lower the front of the passenger seat and push it toward the rear at the same time.
– Position locking pin ❷ in the lock housing and press the passenger seat forward until the locking pin engages with an audible click.
– Check that the passenger seat is mounted correctly.

14.7 Remove the front rider's seat

Preparatory work

– Remove the passenger seat. (p. 152)

Main work

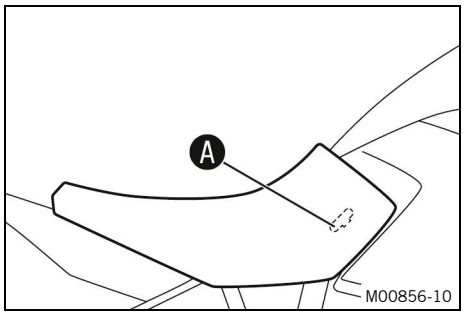

– Lift the rider's seat back and unhook in the Ⓐ area.

14.8 Mounting the front rider's seat

Main work

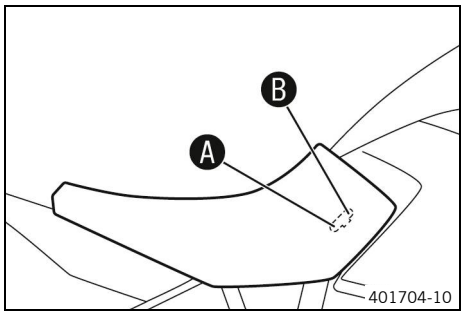

– Attach the recesses on the front rider's seat to the fuel tank at the desired seat position Ⓐ or Ⓑ, and push the front rider's seat forward while lowering it at the rear.
– Check that the front rider's seat is mounted correctly.

Reworking

– Mount the passenger seat. (p. 153)

14.9 Checking the chain for dirt

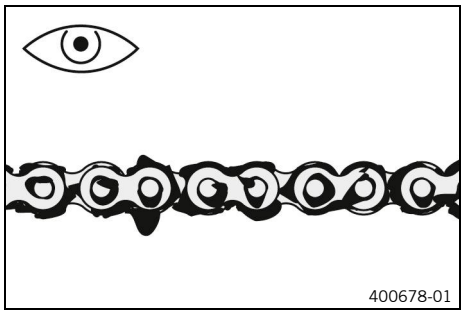

– Check the chain for coarse dirt accumulation.
  » If the chain is very dirty:
    – Clean the chain. (p. 154)

14.10 Cleaning the chain

WARNING

Danger of accidents Oil, grease or wax on the brake discs reduces the brake action.

– Always keep the brake discs free of oil, fat and wax.
– Clean the brake discs with brake cleaner when necessary.

WARNING

Danger of accidents Lubricants on the tires reduces the road grip.

– Remove lubricants from the tires using a suitable cleaning agent.

NOTE

Environmental hazard Hazardous substances cause environmental damage.

– Dispose of oils, grease, filters, fuel, cleaning agents, brake fluid, etc. correctly and in accordance with the applicable regulations.

Note

The service life of the chain depends largely on its maintenance.

Preparatory work

– Raise the motorcycle with the rear lifting gear. (p. 151)

Main work

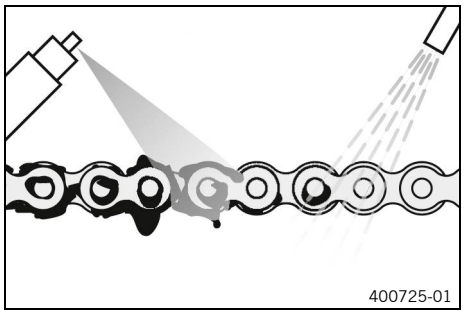

– Rinse off the loose dirt with a gentle jet of water.
– Remove old grease residues with a chain cleaner.

Chain cleaner (p. 239)

– After drying, apply chain spray.

Street chain spray (p. 237)

Reworking

– Remove the rear of the motorcycle from the lifting gear. (p. 151)

14.11 Checking the chain tension

WARNING

Danger of accidents Incorrect chain tension can damage components and result in an accident.

If the chain is tension is too high, the chain, front sprocket, rear sprocket, transmission, and rear wheel bearings wear more quickly. Some components may break if overloaded.

If the chain is too loose, the chain may fall off the front sprocket or the rear sprocket. This can damage the rear wheel or the engine.

– Check the chain tension regularly.
– Set the chain tension in accordance with the specification.

Preparatory work

– Raise the motorcycle with the rear lifting gear. (p. 151)

Main work

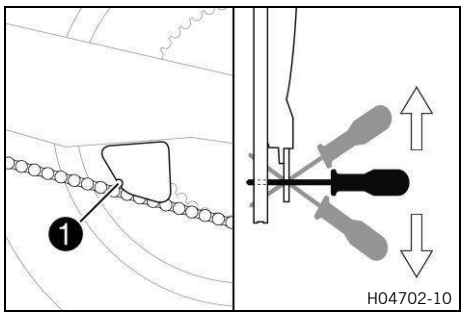

– Shift the transmission into the neutral position N.
– Insert a screwdriver into the recess 1 of the chain guide between the chain and the link fork.
– Push the screwdriver up slightly.

The upper part of the chain must be taut.
The chain tension is correctly set when the screwdriver is parallel to the ground with slight pressure.
Chain wear is not always even, so repeat this measurement at different positions on the chain.

» If the screwdriver points downwards, the chain tension is too high:
  – Adjust the chain tension. (p. 156)

» If the screwdriver points upwards, the chain tension is too low:
  – Adjust the chain tension. (p. 156)

Reworking

– Remove the rear of the motorcycle from the lifting gear. (p. 151)

14.12 Adjusting the chain tension

WARNING

Danger of accidents Incorrect chain tension can damage components and result in an accident.

If the chain is tension is too high, the chain, front sprocket, rear sprocket, transmission, and rear wheel bearings wear more quickly. Some components may break if overloaded.

If the chain is too loose, the chain may fall off the front sprocket or the rear sprocket. This can damage the rear wheel or the engine.

– Check the chain tension regularly.
– Set the chain tension in accordance with the specification.

Preparatory work

– Raise the motorcycle with the rear lifting gear. (p. 151)
– Check the chain tension. (p. 155)

Main work

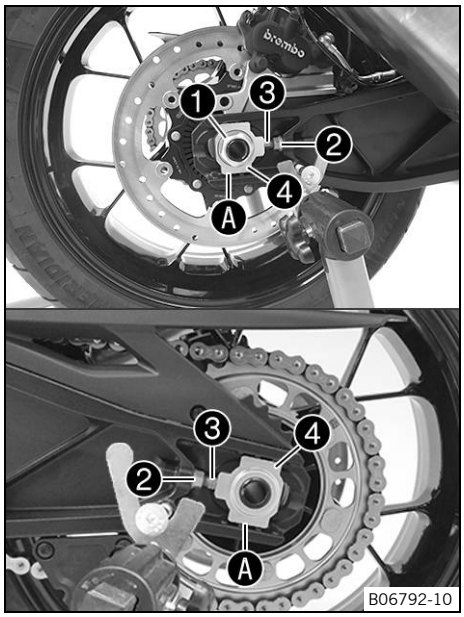

– Loosen nut ❶.
– Loosen nuts ❷.
– Adjust the chain tension by turning adjusting screws ❸ on the left and right.

The chain tension is correctly set when the screwdriver is parallel to the ground.
In order for the rear wheel to be correctly aligned, the markings on the left and right chain adjusters must be in the same position relative to reference markings Ⓐ.
The upper part of the chain must be taut.
Chain wear is not always even, so repeat this measurement at different positions on the chain.

– Tighten nuts ❷.
– Make sure that chain tension adjusters ❹ are fitted correctly on adjusting screws ❸.
– Tighten nut ❶.

Nut, wheel spindle, rear	
M25×1.5	90 Nm (66.4 ft·lb$_f$) Long-life grease

Note

Chain tension adjusters ❹ can be turned.

Reworking

– Remove the rear of the motorcycle from the lifting gear. (p. 151)

14.13 Checking the chain, rear sprocket, and engine sprocket

Preparatory work

– Raise the motorcycle with the rear lifting gear. (p. 151)

Main work

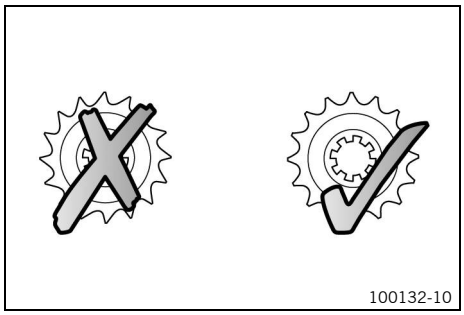

– Check the chain, rear sprocket, and front sprocket for wear.
  » If the chain, rear sprocket or engine sprocket is worn:
    – Change the drivetrain kit.

Always replace the front sprocket, rear sprocket, and chain together.

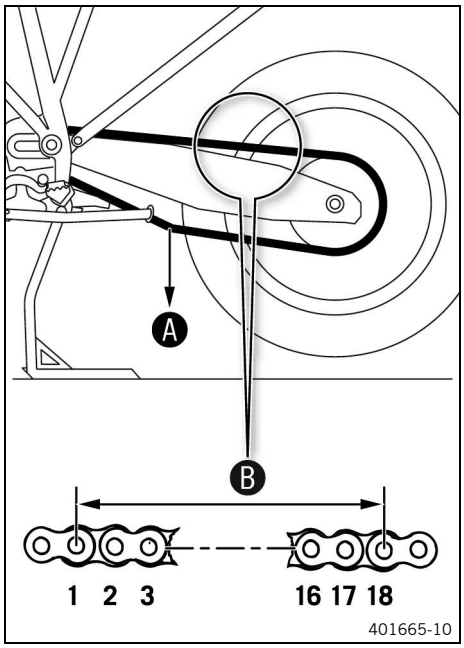

– Shift the transmission into the neutral position N.
– Pull on the lower chain section with specified weight A.

Weight, chain wear measurement	15 kg (33.1 lb)

– Measure distance B of 18 chain rollers in the upper chain section.

Maximum distance B of chain rollers at the longest chain section	272 mm (10.71 in)
Chain wear is not always even, so repeat this measurement at different positions on the chain.	

  » If distance B is greater than the specified measurement:
    – Change the drivetrain kit.

When installing a new chain, also replace the rear sprocket and front sprocket.

Note
New chains wear out faster on old, worn sprockets.
For safety reasons, the chain has no chain joint.

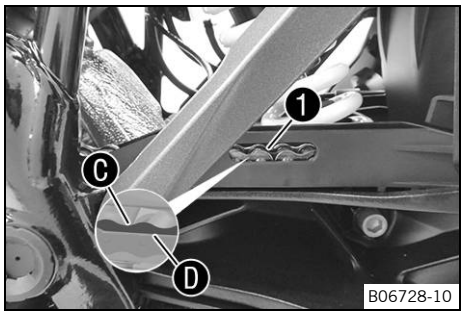

– Check chain sliding guard for wear at the recess.

Note
When the chain slider is new, one third of surface area C of chain links 1 is visible at bottom edge D of the recess.

» If surface area C of the chain links is no longer visible on bottom edge D of the recess:
  – Change the chain slider.
– Check that the chain slider is firmly seated.
  » If the chain slider is loose:
    – Tighten the screws of the chain slider.

Screw, chain slider guard	
M5×10	5 Nm (3.7 ft·lb$_f$)

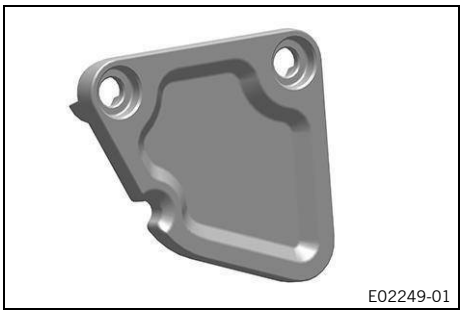

– Check the chain guide for wear.
  » If the chain guide is worn:
    – Change the chain guide.
– Check that the chain guide is firmly seated.
  » If the chain guide is loose:
    – Tighten the screws on the chain guide.

Screw, chain guide	
M6	5 Nm (3.7 ft·lb$_f$)

Reworking

– Remove the rear of the motorcycle from the lifting gear.
(p. 151)

14.14 Checking/correcting the fluid level of hydraulic clutch

WARNING

Health hazard Brake fluid is a harmful substance.

– Keep brake fluid out of the reach of children.
– Wear suitable protective clothing and safety glasses.
– Do not allow brake fluid to come into contact with the skin, the eyes, or clothing.
– Consult a doctor immediately if brake fluid has been ingested.
– Rinse the affected area with plenty of water in the event of contact with the skin.
– Rinse eyes thoroughly with water immediately and consult a doctor if brake fluid comes into contact with the eyes.
– If brake fluid spills on to your clothing, change the clothing.

NOTE

Environmental hazard Hazardous substances cause environmental damage.

– Dispose of oils, grease, filters, fuel, cleaning agents, brake fluid, etc. correctly and in accordance with the applicable regulations.

Note

The fluid level rises with increasing wear of the friction plates.
Avoid contact between brake fluid and painted parts. Brake fluid corrodes paint.

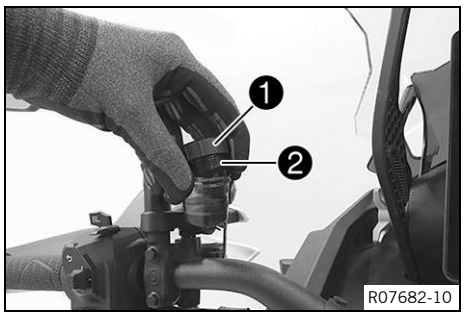

– Move the hydraulic clutch fluid reservoir mounted on the handlebar into a horizontal position.
– Remove screws 1.
– Take off cover 2 with membrane.
– Check the fluid level.

Fluid level below reservoir rim	4 mm (0.16 in)

» If the fluid level does not meet the specifications:
  – Correct the fluid level of the hydraulic clutch.

Brake fluid DOT 5.1 (p. 238)

– Position the cover with diaphragm. Mount and tighten the screws.

Immediately clean up any brake fluid that has overflowed or spilled with water.

14.15 Removing the windshield

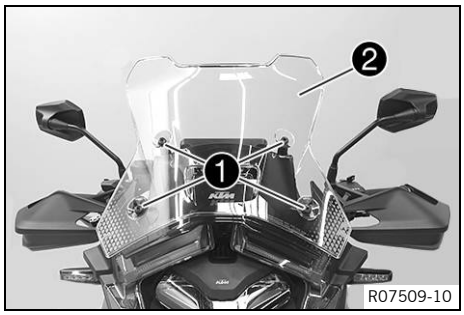

– Remove screws 1 with rubber bushing and windshield 2.

14.16 Installing the windshield

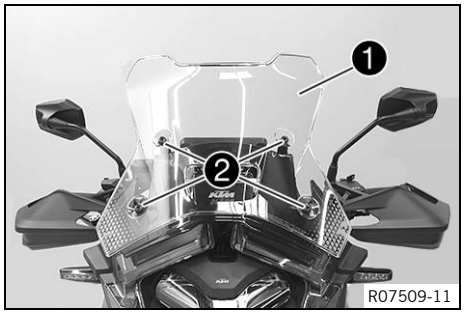

– Position windshield 1.
– Mount and tighten screws 2 with the rubber bushing.

Windshield screw	
M5×14	3.5 Nm (2.58 ft·lb$_f$)

14.17 Removing front right wing

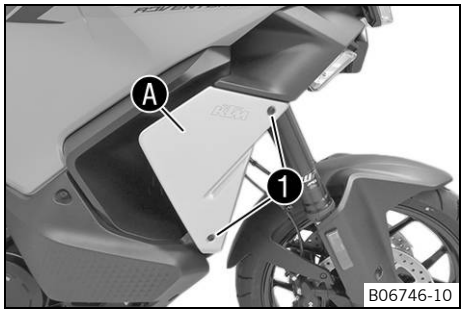

– Remove screws ❶.
– Detach right wing in area Ⓐ and remove it.

14.18 Installing the front right wing

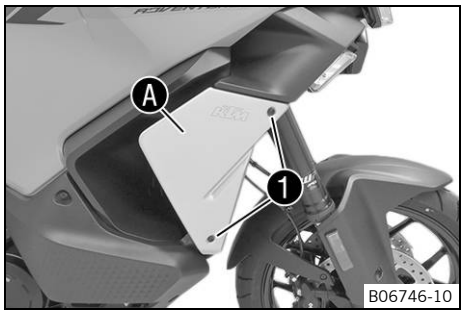

– Position the front right side spoiler and attach it in area Ⓐ.
– Mount and tighten screws ❶.

Trim part screw	
M5	3.5 Nm (2.58 ft·lb$_f$)

14.19 Removing the skid plate

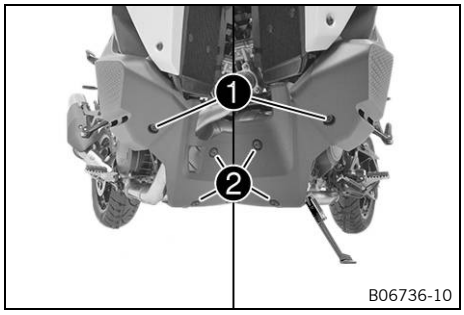

– Remove screws ❶.
– Remove screws ❷.
– Take off the skid plate.

14.20 Installing the skid plate

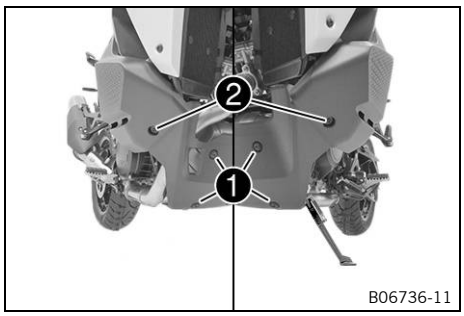

– Position the motor guard.
– Mount and tighten screws ❶.

Screw, engine guard	
M6	10 Nm (7.4 ft·lb$_f$)

– Mount and tighten screws ❷.

Screw, engine guard	
M6	10 Nm (7.4 ft·lb$_f$)

14.21 Removing the oil plug cover

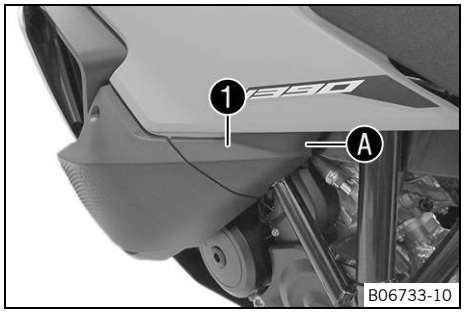

– Pull cover ❶ in area Ⓐ back.
– Take off the cover.

14.22 Installing the oil plug cover

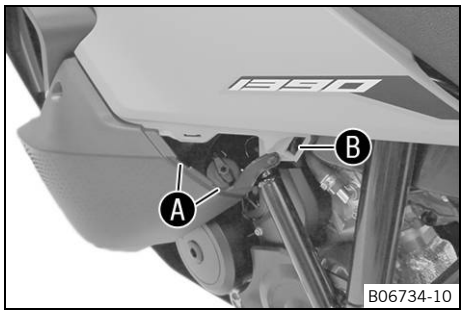

– Attach cover in areas Ⓐ.
– Snap cover into place in area Ⓑ.

14.23 Removing the front top fender

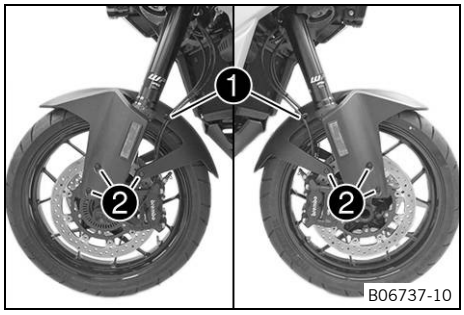

– Open bracket ❶ and detach the brake lines and cable.
– Remove screws ❷.
– Take the fender off to the front.

Pay attention to the routing of the brake lines and cables.

14.24 Installing the front top fender

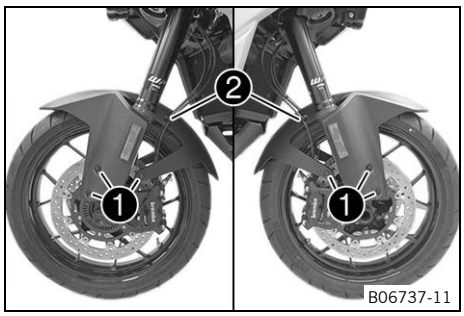

– Position the fender.

Pay attention to the routing of the brake lines and cables.

– Mount and tighten screws ❶.

Screw, fender	
M5×12	3.5 Nm (2.58 ft·lb$_f$)

– Insert the brake lines and cable in brackets ❷ and close the bracket.

14.25 Cleaning the dust boots of the fork legs

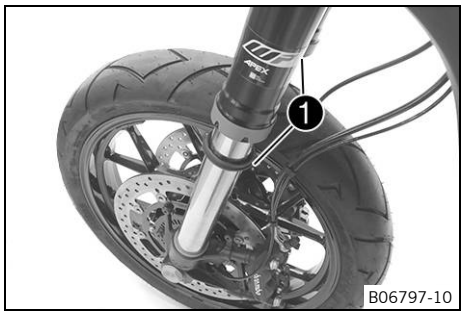

Preparatory work

– Remove the front top fender. (p. 161)

Main work

– Push dust boot 1 downward on both fork legs.

Note

The dust boots should remove dust and coarse dirt particles from the inner fork tubes. Over time, dirt can accumulate behind the dust boots. If this dirt is not removed, the oil seals behind can start to leak.

WARNING

Danger of accidents Oil, grease or wax on the brake discs reduces the brake action.

– Always keep the brake discs free of oil, fat and wax.
– Clean the brake discs with brake cleaner when necessary.

– Clean and oil the dust boots and the inner fork tube of both fork legs.

Universal oil spray (p. 237)

– Press dust boots 1 back into their installation position.
– Remove excess oil.

Reworking

– Install the front top fender. (p. 161)

15.1 Anti-lock braking system

WARNING

Danger of accidents Changes to the vehicle impair the function of the ABS.

- Do not make any changes to the suspension travel.
- Only use spare parts on the brake system which have been approved and recommended by the vehicle manufacturer.
- Only use tires and wheels approved and recommended by the vehicle manufacturer with the corresponding speed rating.
- Maintain the specified tire pressure.
- Ensure that service work and repairs are performed professionally.

WARNING

Danger of accidents Driving aids can reduce the probability of a fall only within physical limits.

It is not always possible to compensate for certain riding situations, for example with luggage loaded with a high center of gravity, varying road surfaces, steep descents or full braking without disengaging the gear.

- Adapt your riding style to the road conditions and your driving ability.

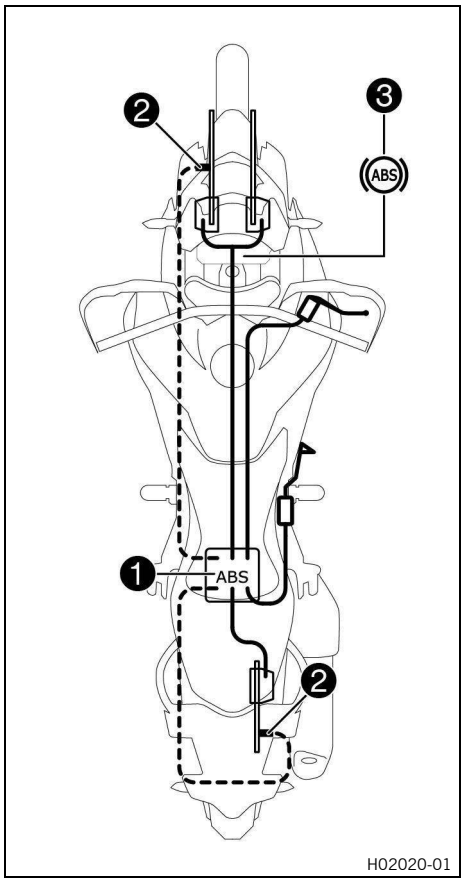

The ABS module ❶, consisting of a hydraulic unit, an ABS control unit, and a return pump, is located under the seat. One wheel speed sensor ❷ is located in each case on the front and the rear wheel.

WARNING

Danger of accidents An incorrectly selected ABS mode makes it more difficult to control the vehicle.

The ABS modes are each only suitable for certain conditions.

- Always select an ABS mode that suits the ground and the riding situation.

ABS is a safety system that prevents locking of the wheels when driving straight ahead without the influence of lateral forces.

ABS has two operating modes: the **Road** and **Offroad**ABS modes.

In the **Road** ABS mode, the brakes are also applied to the rear wheel when the front brake is applied. ABS regulates both wheels.

In the **Offroad** ABS mode, the front brake slows the front wheel. The rear brake slows the rear wheel. There is no ABS control on the rear wheel.

Note

In ABS mode **Offroad**, the ABS regulates the front wheel later and the rear wheel can lock, resulting in a risk of falling.

The ABS operates with two independent brake circuits (front and rear brakes). When the ABS control unit detects a locking tendency in a wheel, ABS begins regulating the brake pressure. The control function causes a slight pulsing of the hand and foot brake levers.

Note

If driving aids, e.g. the cruise control system or **MSC** have initiated or supported a braking maneuver, the brake lever pressure point may change slightly during the next braking maneuver due the system.

The performance and function of the brake system are not impaired by this.

The ABS warning light ❸ must light up after the ignition is switched on and go out after starting off. If it does not go out after starting off or if it lights up while riding, this indicates a malfunction in the ABS. In this case, the ABS is no longer enabled and the wheels may lock during braking. The brake system itself stays functional; only ABS control is not available.

The ABS warning lamp may also light up if the rotating speeds of the front and rear wheels differ greatly under extreme riding conditions, for example when making "wheelies" or if the rear wheel spins. This causes the ABS to switch off.

To reactivate the ABS, stop the vehicle and switch off the ignition. The ABS is reactivated when the vehicle is switched on again. The ABS warning light goes out after starting off.

15.1.1 MSC

The **MSC** is an auxiliary function for the ABS, which can prevent locking and slipping of the wheels during braking while leaning at an angle (when cornering), within physical limitations.

Due to the inertial measurement unit, the ABS control is dependent on the angle of inclination and pitch.

ABS control that is dependent on the inclination and pitch angle improves the riding stability and braking effect in all riding situations. The **MSC** also reduces the righting moment during hard braking in curves. This prevents the motorcycle from righting itself from an inclined angle and moving along a larger curve radius. Due to the additional electronic control of the brake force distribution between the two wheels, the braking force is optimally distributed and the motorcycle is additionally stabilized.

Note

The **MSC** is only active in **Road** ABS mode.

15.2 Checking the brake discs

WARNING

Danger of accidents Worn-out brake discs reduce the braking action.

– Make sure that worn-out brake discs are replaced immediately.

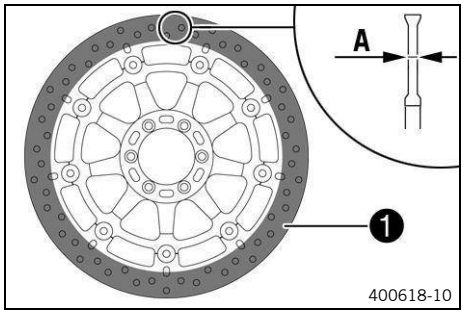

– Check the brake disc thickness of the front and rear brake disc at several places on the disc to see if they conform to measurement A.

Brake disc wear limit	
front	4 mm (0.16 in)
rear	4.5 mm (0.177 in)

Note

Wear will reduce the thickness of the brake disc at contact surface 1 of the brake linings.

» If the brake disc thickness is less than the specified value:
  – Change the front brake discs.
  – Change the brake discs on the rear brake.

– Check the front and rear brake discs for damage, cracks, and deformation.
  » If the brake disc shows signs of damage, cracks, or deformation:
    – Change the front brake discs.
    – Change the brake discs on the rear brake.

15.3 Checking the brake fluid level for the front brake

WARNING

Danger of accidents Brake fluid which is too old or of the wrong type impairs the function of the brake system.

– Make sure that brake fluid for the front and rear brake is changed in accordance with the service schedule.
– Make sure that only clean, approved brake fluid from a tightly sealed container is used.

WARNING

Danger of accidents An insufficient brake fluid level will cause the brake system to fail.

If the brake fluid level drops below the specified marking or the specified value, the brake system has a leak or the brake pads are worn down.

– Have the brake system checked and make sure that the problem has been eliminated before the vehicle is used again.

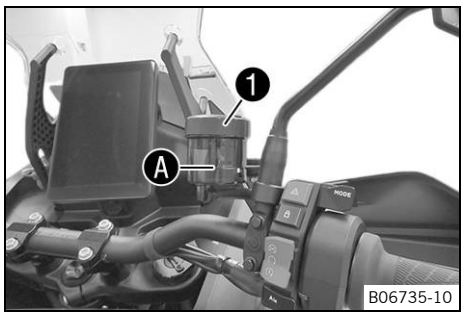

– Move the brake reservoir mounted on the handlebar to a horizontal position.
– Check brake fluid level in brake fluid reservoir 1.
  » If the brake fluid level has dropped below **MIN** marking A:
    – Add brake fluid for the front brake. (p. 166)

15.4 Adding brake fluid for the front brake

WARNING

Danger of accidents Brake fluid which is too old or of the wrong type impairs the function of the brake system.

– Make sure that brake fluid for the front and rear brake is changed in accordance with the service schedule.
– Make sure that only clean, approved brake fluid from a tightly sealed container is used.

WARNING

Danger of accidents An insufficient brake fluid level will cause the brake system to fail.

If the brake fluid level drops below the specified marking or the specified value, the brake system has a leak or the brake pads are worn down.

– Have the brake system checked and make sure that the problem has been eliminated before the vehicle is used again.

WARNING

Health hazard Brake fluid is a harmful substance.

– Keep brake fluid out of the reach of children.
– Wear suitable protective clothing and safety glasses.
– Do not allow brake fluid to come into contact with the skin, the eyes, or clothing.
– Consult a doctor immediately if brake fluid has been ingested.
– Rinse the affected area with plenty of water in the event of contact with the skin.
– Rinse eyes thoroughly with water immediately and consult a doctor if brake fluid comes into contact with the eyes.
– If brake fluid spills on to your clothing, change the clothing.

NOTE

Environmental hazard Hazardous substances cause environmental damage.

– Dispose of oils, grease, filters, fuel, cleaning agents, brake fluid, etc. correctly and in accordance with the applicable regulations.

Note

Avoid contact between brake fluid and painted parts. Brake fluid corrodes paint.

Preparatory work

– Check that the brake pads of the front brake are secured. (p. 167)

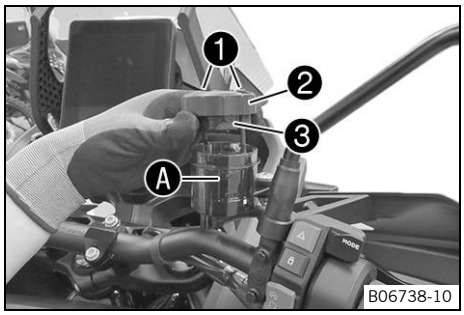

Main work

- Move the brake reservoir mounted on the handlebar to a horizontal position.
- Remove screws ❶.
- Take off cover ❷ with diaphragm ❸.
- Add brake fluid up to the **MAX** marking Ⓐ.

Brake fluid DOT 5.1 (p. 238)

- Position cover ❷ with diaphragm ❸.
- Mount and tighten screws ❶.

Front brake reservoir cover	
	1 Nm (0.7 ft·lb$_f$)

Immediately clean up any brake fluid that has overflowed or spilled with water.

15.5 Checking that the brake pads of the front brake are secured

WARNING

Danger of accidents Worn brake pads reduce the brake action.

- Make sure that worn brake pads are replaced immediately.

WARNING

Danger of accidents Damaged brake discs reduce the braking action.

If the brake linings are not changed in time, the brake lining carriers grind against the brake disc. As a consequence, the brake action is greatly reduced and the brake discs are destroyed.

- Check the brake linings regularly.

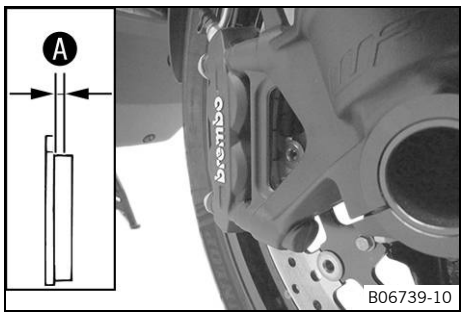

- Check all brake linings on both brake calipers to ensure they have the minimum thickness Ⓐ.

Minimum pad thickness Ⓐ	≥ 1 mm (≥ 0.04 in)

  » If it is less than the minimum thickness:
    - Change the front brake pads.
- Check all the brake linings on both the brake calipers for damage and cracking.
  » If there is damage or cracking:
    - Change the front brake pads.
- Check that the brake pads are secured.
  » If the brake pads are not secured correctly:
    - Secure brake pads, replace with new parts if necessary.

15.6 Checking the brake fluid level for the rear brake

WARNING

Danger of accidents Brake fluid which is too old or of the wrong type impairs the function of the brake system.

- Make sure that brake fluid for the front and rear brake is changed in accordance with the service schedule.
- Make sure that only clean, approved brake fluid from a tightly sealed container is used.

WARNING

Danger of accidents An insufficient brake fluid level will cause the brake system to fail.

If the brake fluid level drops below the specified marking or the specified value, the brake system has a leak or the brake pads are worn down.

- Have the brake system checked and make sure that the problem has been eliminated before the vehicle is used again.

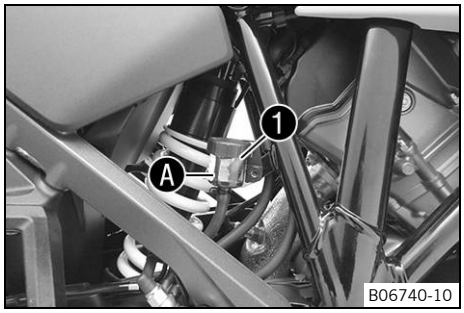

- Stand the vehicle upright.
- Check brake fluid level in brake fluid reservoir 1.
  - » If the fluid level reaches the **MIN** marking A:
    - Add brake fluid for the rear brake. (p. 168)

15.7 Adding brake fluid for the rear brake

WARNING

Danger of accidents Brake fluid which is too old or of the wrong type impairs the function of the brake system.

- Make sure that brake fluid for the front and rear brake is changed in accordance with the service schedule.
- Make sure that only clean, approved brake fluid from a tightly sealed container is used.

WARNING

Danger of accidents An insufficient brake fluid level will cause the brake system to fail.

If the brake fluid level drops below the specified marking or the specified value, the brake system has a leak or the brake pads are worn down.

- Have the brake system checked and make sure that the problem has been eliminated before the vehicle is used again.

WARNING

Health hazard Brake fluid is a harmful substance.

- Keep brake fluid out of the reach of children.
- Wear suitable protective clothing and safety glasses.
- Do not allow brake fluid to come into contact with the skin, the eyes, or clothing.
- Consult a doctor immediately if brake fluid has been ingested.
- Rinse the affected area with plenty of water in the event of contact with the skin.
- Rinse eyes thoroughly with water immediately and consult a doctor if brake fluid comes into contact with the eyes.
- If brake fluid spills on to your clothing, change the clothing.

NOTE

Environmental hazard Hazardous substances cause environmental damage.

– Dispose of oils, grease, filters, fuel, cleaning agents, brake fluid, etc. correctly and in accordance with the applicable regulations.

Note

Avoid contact between brake fluid and painted parts. Brake fluid corrodes paint.

Preparatory work

– Check that the brake pads of the rear brake are secured. (p. 170)

Main work

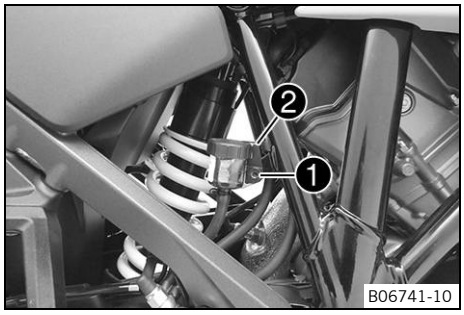

– Remove screw ❶ with lock washer ❷.
– Keep the brake reservoir vertical.

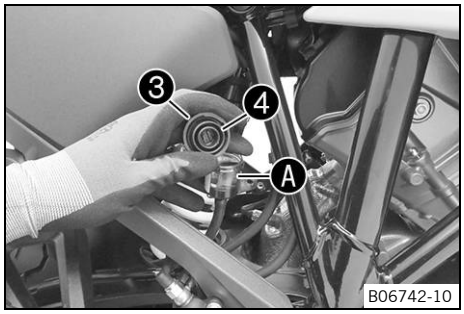

– Remove screw cap ❸ with membrane ❹.
– Add brake fluid up to the **MAX** marking Ⓐ.

Brake fluid DOT 5.1 (p. 238)

– Mount and tighten screw cap ❸ with membrane ❹.

Rear brake reservoir cover	
	3.5 Nm (2.58 ft·lb$_f$)

Immediately clean up any brake fluid that has overflowed or spilled using water.

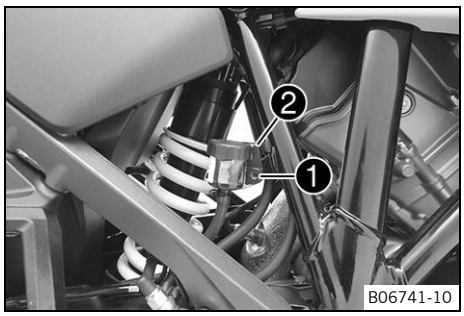

– Position the brake reservoir with the lock washer ❷.
– Tighten screw ❶.

Screw, brake reservoir, rear brake	
M5	3.5 Nm (2.58 ft·lb$_f$) **Loctite® 243**

15.8 Checking that the brake pads of the rear brake are secured

WARNING

Danger of accidents Worn brake pads reduce the brake action.

– Make sure that worn brake pads are replaced immediately.

WARNING

Danger of accidents Damaged brake discs reduce the braking action.

If the brake linings are not changed in time, the brake lining carriers grind against the brake disc. As a consequence, the brake action is greatly reduced and the brake discs are destroyed.

– Check the brake linings regularly.

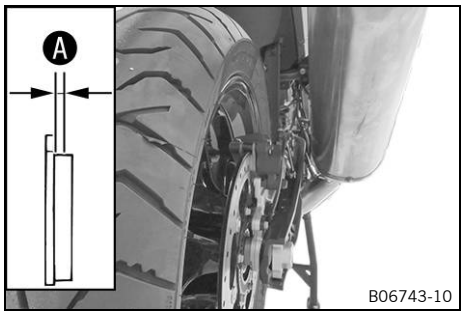

– Check the brake linings for minimum thickness A.

Minimum pad thickness A	≥ 1 mm (≥ 0.04 in)

» If the minimum thickness is less than specified:

– Change the rear brake pads.

– Check the brake pads for damage and cracking.

» If there is damage or cracking:

– Change the rear brake pads.

– Check that the brake pads are secured.

» If the brake pads are not secured correctly:

– Secure brake pads, replace with new parts if necessary.

16.1 Removing the front wheel

Preparatory work

– Raise the motorcycle with the rear lifting gear. (p. 151)
– Remove the front top fender. (p. 161)
– Lift the motorcycle with the front lifting gear. (p. 151)

Main work

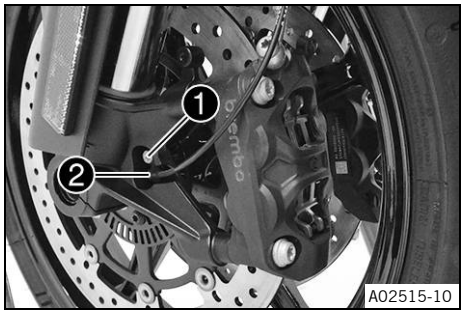

– Place a load on the rear of the vehicle.
  ✓ The front wheel is not in contact with the ground.
– Remove screw ❶ and pull wheel speed sensor ❷ out of the hole.

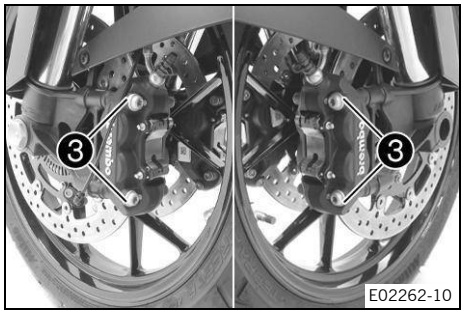

– Remove screws ❸ from both brake calipers.
– Press back brake linings by slightly tilting the brake calipers laterally on the brake disc.
– Pull brake calipers carefully back from the brake discs and hang to the side loosely.

> Do not operate the hand brake lever if the brake calipers have been removed.

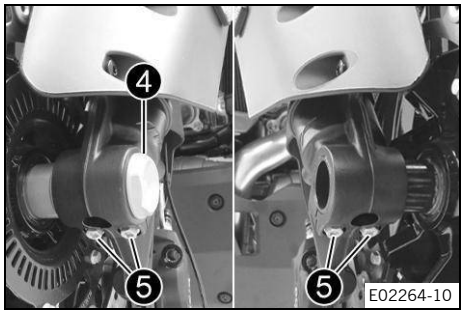

– Loosen screw ❹ by four turns.
– Loosen screws ❺.
– Press on screw ❹ to push the wheel spindle out of the fork shoe.
– Remove screw ❹.

WARNING

Danger of accidents Damaged brake discs reduce the braking action.

– Always lay the wheel down in such a way that the brake disc is not damaged.

– Hold front wheel and remove wheel spindle. Take the front wheel out of the fork.

> Do not actuate the hand brake lever when the front wheel is removed.

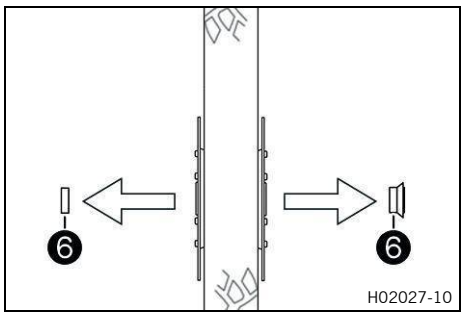

– Remove spacers ❻.

16.2 Installing the front wheel

WARNING

Danger of accidents Oil, grease or wax on the brake discs reduces the brake action.

– Always keep the brake discs free of oil, fat and wax.
– Clean the brake discs with brake cleaner when necessary.

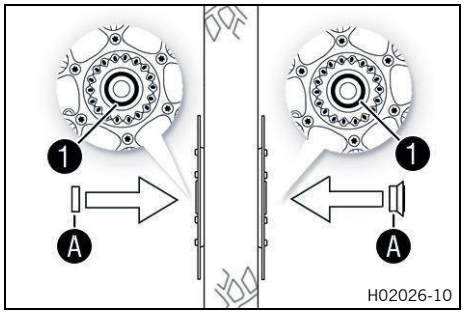

Main work

– Check the wheel bearing for damage and wear.
  » If the wheel bearing is damaged or worn:
    – Change the front wheel bearing.
– Clean and grease radial shaft seal ❶ and contact surfaces Ⓐ on the spacers.

Long-life grease (p. 237)

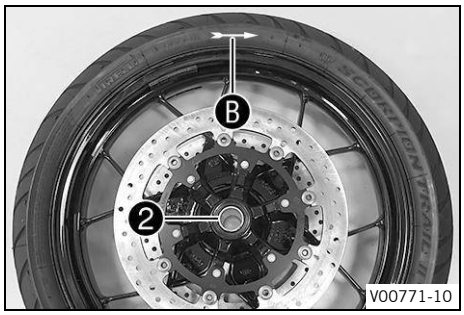

– Insert narrow spacer ❷ on the right in the direction of travel.

Note

Arrow Ⓑ indicates the direction of travel of the front wheel.
The wheel speed sensor wheel is on the left viewed in the direction of travel.

– Insert the wide spacer on the left in the direction of travel.

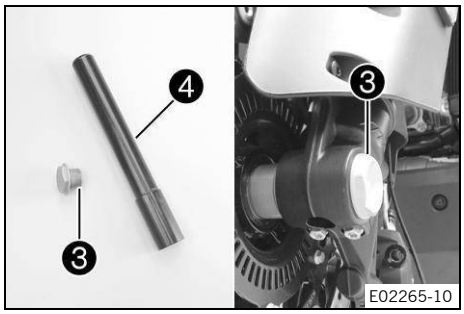

WARNING

Danger of accidents Oil, grease or wax on the brake discs reduces the brake action.

– Always keep the brake discs free of oil, fat and wax.
– Clean the brake discs with brake cleaner when necessary.

– Clean and grease screw ❸ and wheel spindle ❹.

Long-life grease (p. 237)

– Jack up the front wheel into the fork, position it, and insert the wheel spindle.
– Mount and tighten screw ❸.

Screw, wheel spindle, front	
M25×1.5	45 Nm (33.2 ft·lb$_f$) Long-life grease

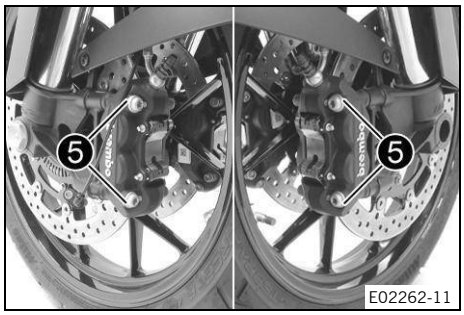

– Position brake calipers.
✓ The brake pads are positioned correctly.
– Mount screws ❺ on both brake calipers, but do not tighten yet.

Screw, front brake caliper	
M10×1.25×55	45 Nm (33.2 ft·lb$_f$) **Loctite® 243**

– Operate the hand brake lever repeatedly until the brake pads are in contact with the brake disc and a pressure point is reached. Secure the hand brake lever in the activated position.
✓ The brake calipers straighten.
– Tighten screws ❺ on both brake calipers.

Screw, front brake caliper	
M10×1.25×55	45 Nm (33.2 ft·lb$_f$) **Loctite® 243**

– Remove the locking piece of the hand brake lever.

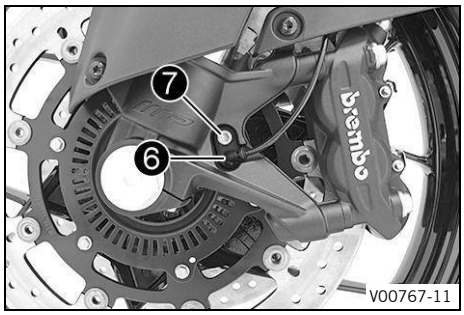

– Position wheel speed sensor ❻ in the hole.
– Mount and tighten screw ❼.

Screw, front wheel speed sensor	
M6×16	8 Nm (5.9 ft·lb$_f$)

– Take the motorcycle off the front lifting gear. (p. 152)
– Remove the rear of the motorcycle from the lifting gear. (p. 151)

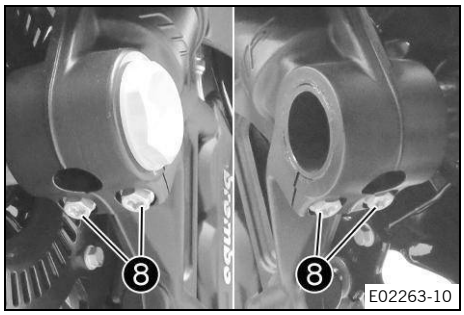

– Operate the front brake and compress the fork a few times firmly.
✓ The fork legs straighten.
– Tighten screws ❽.

Screw, fork shoe	
M8×20	15 Nm (11.1 ft·lb$_f$)

Reworking

– Install the front top fender. (p. 161)

16.3 Removing the rear wheel

Preparatory work

– Raise the motorcycle with the rear lifting gear. (p. 151)

Main work

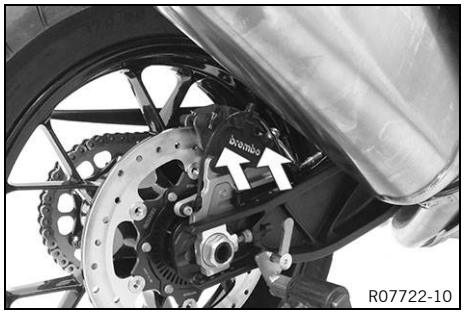

– Manually press the brake caliper toward the brake disc to push back the brake pistons.

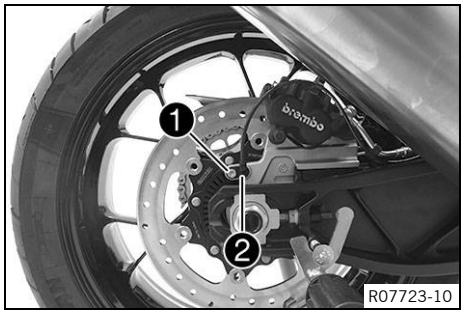

– Remove screw ❶ and pull wheel speed sensor ❷ out of the hole.

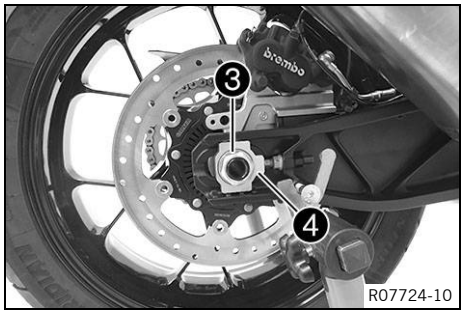

– Remove nut ❸. Remove chain tension adjuster ❹.

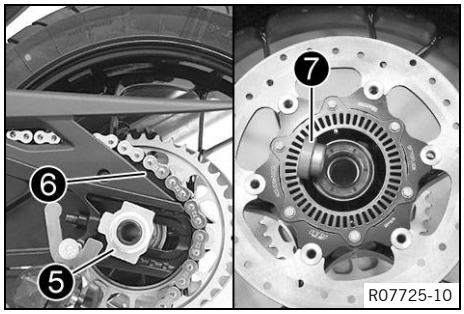

– Pull out wheel spindle ❺ far enough to allow the rear wheel to be pushed forward.
– Push the rear wheel forward as far as possible. Take the chain off the rear sprocket and place it on chain sprocket guard ❻.

WARNING

Danger of accidents Damaged brake discs reduce the braking action.

– Always lay the wheel down in such a way that the brake disc is not damaged.

– Hold the rear wheel and remove wheel spindle. Take the rear wheel out of the swingarm.

Do not operate the foot brake when the rear wheel is removed.

– Remove spacer ❼.

16.4 Installing the rear wheel

WARNING

Danger of accidents Oil, grease or wax on the brake discs reduces the brake action.

– Always keep the brake discs free of oil, fat and wax.
– Clean the brake discs with brake cleaner when necessary.

WARNING

Danger of accidents There is no braking effect to start with at the rear brake after installing the rear wheel.

– Actuate the foot brake several times before going on a ride until you can feel a firm pressure point.

Main work

– Check the rear hub damping rubber pieces. (p. 176)

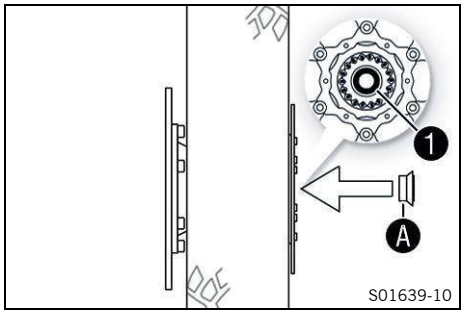

– Check the wheel bearing for damage and wear.
  » If the wheel bearing is damaged or worn:
    – Change the rear wheel bearing.
– Clean and grease shaft seal ring ❶ and contact surface Ⓐ of the spacer.

  Long-life grease (p. 237)

– Insert a spacer.
– Clean and grease the thread of the wheel spindle and nut.

  Long-life grease (p. 237)

– Mount the damping rubber pieces and rear sprocket carrier on the rear wheel.
– Place the rear wheel in the link fork and engage the brake disc in the brake caliper.

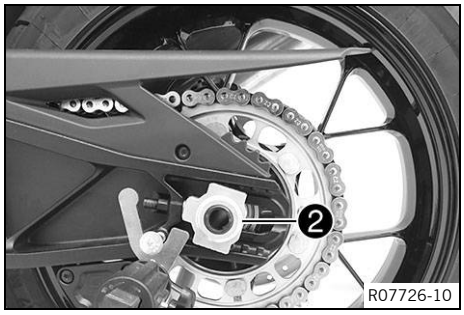

– Mount wheel spindle ❷, but do not push it in all the way.
– Push the rear wheel forward as far as possible and lay the chain on the rear sprocket.

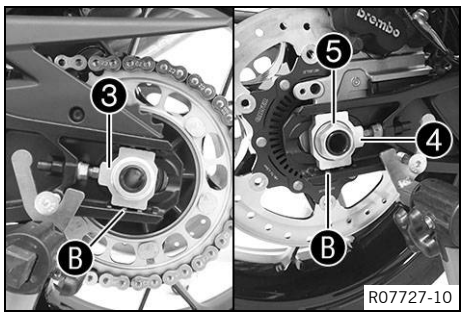

– Push wheel spindle in all the way and mount chain adjuster ❹ and nut ❺.

Mount chain adjusters ❸ and ❹ in the same position.

– Make sure that the chain tension adjusters are fitted correctly on the adjusting screws.

In order for the rear wheel to be correctly aligned, the markings on the left and right chain adjusters must be in the same position relative to reference markings Ⓑ.

– Tighten nut ❺.

Nut, wheel spindle, rear	
M25×1.5	90 Nm (66.4 ft·lb$_f$) Long-life grease

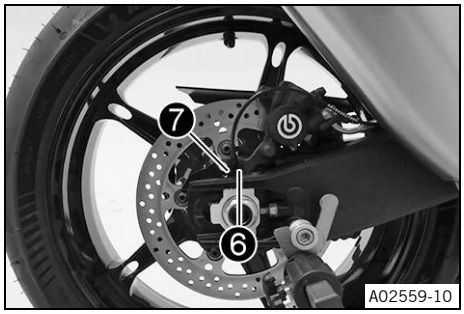

– Position wheel speed sensor ❻ in the hole.
– Mount and tighten screw ❼.

Screw, rear wheel speed sensor	
M6×16	8 Nm (5.9 ft·lb$_f$)

– Actuate the brake pedal repeatedly until the brake pads are in contact with the brake disc and a pressure point is achieved.

Reworking

– Check the chain tension. (p. 155)
– Remove the rear of the motorcycle from the lifting gear. (p. 151)

16.5 Checking the rear hub damping rubber pieces

Note

The engine power is transmitted from the rear sprocket to the rear wheel via the 6 damping rubber pieces. The damping rubber pieces wear out during operation. If the damping rubber pieces are not changed in time, the rear sprocket carrier and the rear hub will be damaged.

Preparatory work

– Raise the motorcycle with the rear lifting gear. (p. 151)
– Remove the rear wheel. (p. 174)

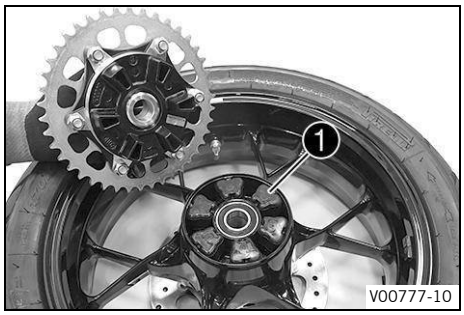

Main work

– Check damping rubber pieces ❶ of the rear hub for damage and wear.
  » If the damping rubber pieces of the rear hub are damaged or worn:
    – Change all the damping rubber pieces of the rear hub.

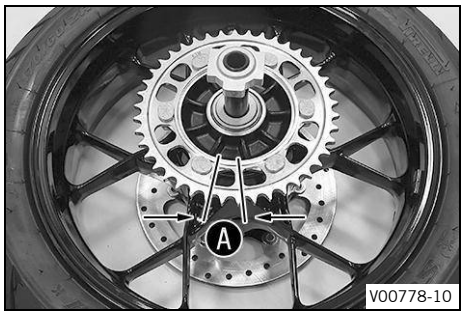

– Lay the rear wheel on a workbench with the rear sprocket facing upward and insert the wheel spindle in the hub.
– Check the rear sprocket play Ⓐ.

Play of damping rubber pieces on rear wheel	≤ 5 mm (≤ 0.20 in)

Note
Measure the play on the outside of the rear sprocket.

» If clearance Ⓐ is larger than the specified value:
  – Change all the damping rubber pieces of the rear hub.

Reworking

– Install the rear wheel. (p. 175)
– Check the chain tension. (p. 155)
– Remove the rear of the motorcycle from the lifting gear. (p. 151)

16.6 Checking the tire condition

WARNING
Danger of accidents If a tire bursts while riding, the vehicle becomes uncontrollable.
– Ensure that damaged or worn tires are replaced immediately.

WARNING
Danger of accidents Non-approved or non-recommended tyres and wheels impact the handling characteristic.
– Only use tires and wheels approved and recommended by the vehicle manufacturer with the corresponding speed rating.

WARNING
Danger of accidents New tires have reduced road grip.
The contact surface on new tires is not yet roughened.
– Run in new tires with moderate riding and only gradually increase the lean angle.

Run-in distance	200 km (124.3 mi)

WARNING

Danger of accidents Different tire profiles on the front and rear wheels can make it more difficult to control the vehicle.

– Make sure that only tires of the same tread type are mounted to the front and rear wheel.

Note

Tire type, tire condition, and tire pressure influence the braking and handling characteristics of the vehicle. Worn tires are particularly unfavorable on wet surfaces.

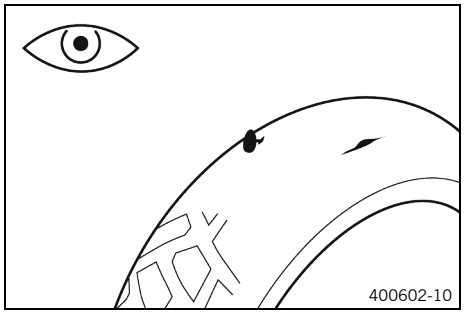

– Check the front and rear tires for cuts, embedded objects, and other damage.
  » If the tires have cuts, run-in objects, or other damage:
    – Change the tires.
– Check the tread depth.

Minimum tread depth	≥ 2 mm (≥ 0.08 in)

Note

Observe the minimum tread depth required by national law.

  » If the tread depth is less than the minimum tread depth:
    – Change the tires.

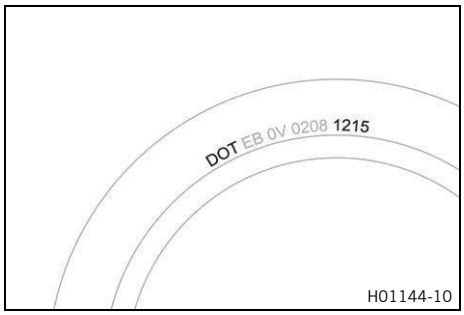

– Check the tire age.

Note

The tire date of manufacture is usually contained in the tire label and is indicated by the last four digits of the **DOT** number. The first two digits indicate the week of manufacture and the last two digits the year of manufacture.

KTM recommends that the tires be changed after 5 years at the latest, regardless of the actual state of wear.

  » If the tires are older than five years:
    – Change the tires.

16.7 Checking the tire pressure

Note

Low tire pressure leads to abnormal wear and the tire overheating.

Correct tire pressure ensures optimal riding comfort and maximum tire service life.

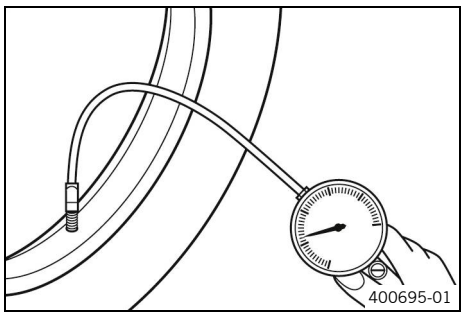

– Remove the protection cap.
– Check the tire pressure when the tires are cold.

Tire pressure, solo / with passenger / full payload	
front: with cold tires	2.4 bar (34.8 psi)
rear: with cold tires	2.9 bar (42.1 psi)

» If the tire pressure does not meet specifications:
  – Correct tire pressure.
– Mount the protection cap.

16.8 Using tire repair spray

WARNING

Danger of accidents Incorrect use of tire repair spray will result in the repaired tire losing pressure.
Tire repair spray cannot be used for all types of damage.
– Observe the instructions and specifications of the manufacturer of the tire repair spray.
– After repairing a tire with tire repair spray, ride slowly and carefully.
– Ride no further than the nearest authorized dealer and have the tire replaced.

NOTE

Material damage Tire repair spray damages the tire pressure sensor.
– Note that after using tire repair spray, the tire pressure sensor may need to be replaced.

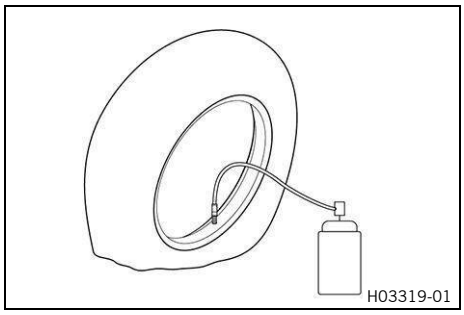

Tire repair spray should only be used in an emergency.
Transporting the broken-down vehicle to the nearest authorized dealer is recommended instead of repairing it.

17.1 Low beam

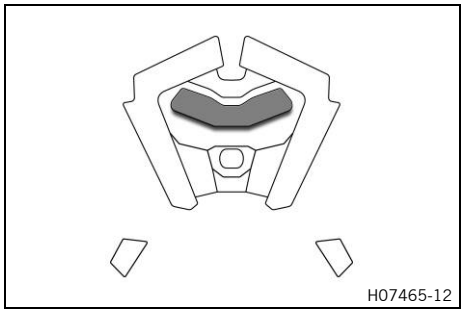

The low beam is integrated in the main headlight.

The low beam is activated when the ignition is switched on.

To save power in the 12-V battery, the low beam is deactivated again after 5 seconds if the engine is not started.

If the ignition is accidentally switched off during the journey, the low beam remains on.

17.2 high beam

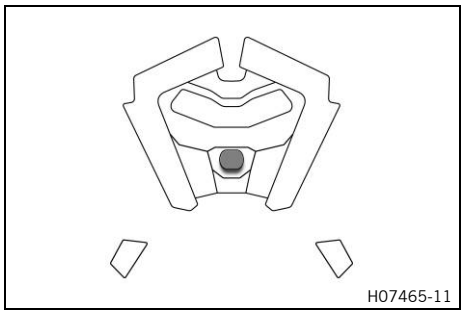

The high beam is integrated in the main headlight.

17.3 daytime running light

WARNING

Danger of accidents When visibility is poor, the daytime running light is not a substitute for the low beam.

Automatic switching between the daytime running light and low beam may only be partially available when visibility is impaired due to fog, snow or rain.

- Ensure that the appropriate type of lighting is always selected.
- If necessary switch off the daytime running lights using the menu before going on a ride or when stopped so that the low beam is switched on permanently.
- Make sure that the daytime running light is deactivated with the diagnostic tool when the menu item is not available, but the low beam is required.
- Note the legal regulations regarding the daytime running light.

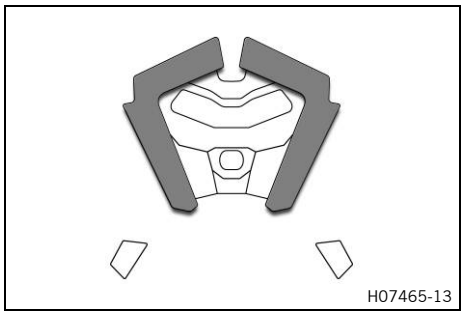

The daytime running (**DRL**)/position light is integrated in the main headlight.

The daytime running light is brighter than the position light.

The daytime running light must only be switched on when visibility conditions are good.

This is controlled by the ambient light sensor in the combination instrument. When visibility conditions are good, the low beam with position light is switched off and the daytime running light is switched on.

When the daytime running light is switched off, the low beam with position light lights up.

On high beam or headlight flasher, the daytime running light changes automatically to the position light.

17.4 Cornering light

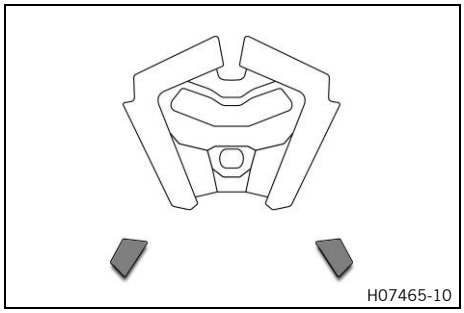

The cornering light is positioned under the main headlight.

Note
To activate the cornering light, the low beam must be switched on and the daytime running light switched off.

The cornering light is activated.

Lean angle for the lower LED	≥ 12° (≥ 0.21 rad)
Lean angle for the middle LED	≥ 20° (≥ 0.35 rad)
Lean angle for the upper LED	≥ 28° (≥ 0.49 rad)
Speed	≥ 6 km/h (≥ 3.7 mph)

17.5 Removing the 12 V battery

WARNING
Danger of accidents Electronic components and safety devices will be damaged if the 12-V battery is discharged or missing.
If the 12-V battery is discharged or defective, malfunctions in the vehicle electronics can occur, especially when starting.
– Never operate the vehicle with a discharged 12-V battery or without a 12-V battery.

WARNING
Risk of injury Battery acid and battery gases cause chemical burns.
– Keep 12–V batteries out of the reach of children.
– Wear suitable protective clothing and safety glasses.
– Avoid contact with battery acid and battery gases.
– Keep sparks or open flames away from the 12 V battery.
– Only charge 12 V batteries in well-ventilated rooms.
– Rinse the affected area immediately with plenty of water in the event of contact with skin.
– Rinse eyes with water for at least 15 minutes and consult a doctor immediately if battery acid and battery gases get into the eyes.

Preparatory work
– Remove the passenger seat. (p. 152)
– Remove the front rider's seat. (p. 153)

Main work

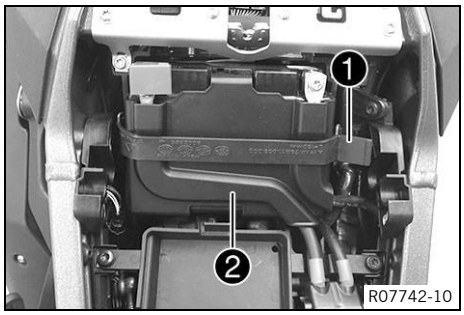

– Detach battery retainer rubber ❶.
– Remove battery cover ❷.

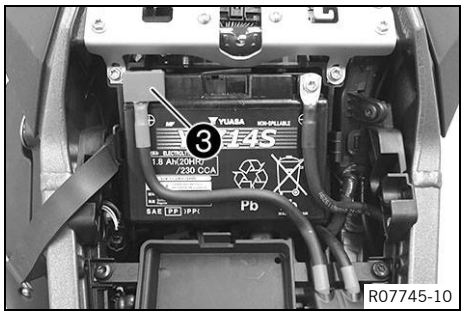

– Remove positive terminal cover ❸.

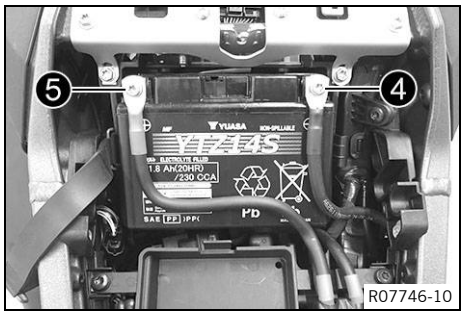

– Remove screw ❹ and disconnect negative cable from the 12 V battery.
– Remove screw ❺ and disconnect positive cable from the 12 V battery.
– Remove the 12-V battery from the battery compartment.

17.6 Installing the 12 V battery

WARNING

Danger of accidents Electronic components and safety devices will be damaged if the 12-V battery is discharged or missing.

If the 12-V battery is discharged or defective, malfunctions in the vehicle electronics can occur, especially when starting.

– Never operate the vehicle with a discharged 12-V battery or without a 12-V battery.

WARNING

Risk of injury Battery acid and battery gases cause chemical burns.

– Keep 12–V batteries out of the reach of children.
– Wear suitable protective clothing and safety glasses.
– Avoid contact with battery acid and battery gases.
– Keep sparks or open flames away from the 12 V battery.
– Only charge 12 V batteries in well-ventilated rooms.
– Rinse the affected area immediately with plenty of water in the event of contact with skin.
– Rinse eyes with water for at least 15 minutes and consult a doctor immediately if battery acid and battery gases get into the eyes.

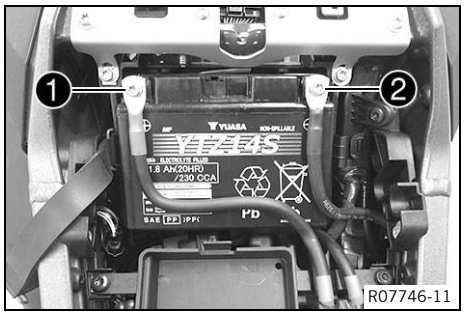

Main work

– Position the 12-V battery in the battery compartment.
– Position positive cable, mount and tighten screw ❶.

Screw, battery terminal	
M6×12	4.5 Nm (3.32 ft·lb$_f$)

– Position negative cable, mount and tighten screw ❷.

Screw, battery terminal	
M6×12	4.5 Nm (3.32 ft·lb$_f$)

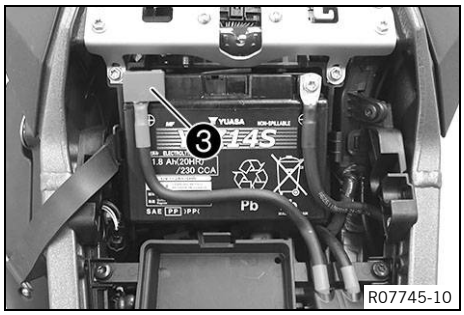

– Mount positive terminal cover ❸.

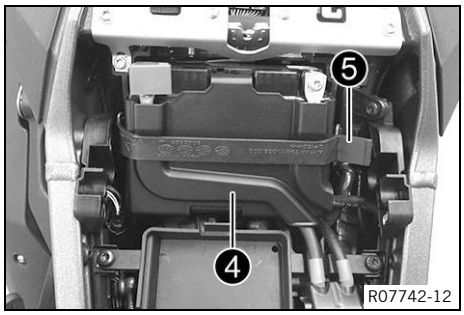

– Position battery cover ❹.
– Attach battery retainer rubber ❺.

Reworking

– Mount the front rider's seat. (p. 153)
– Mount the passenger seat. (p. 153)
– Set the time and date. (p. 192)

17.7 Charging the 12 V battery

WARNING

Risk of injury Battery acid and battery gases cause chemical burns.

– Keep 12–V batteries out of the reach of children.
– Wear suitable protective clothing and safety glasses.
– Avoid contact with battery acid and battery gases.
– Keep sparks or open flames away from the 12 V battery.
– Only charge 12 V batteries in well-ventilated rooms.
– Rinse the affected area immediately with plenty of water in the event of contact with skin.
– Rinse eyes with water for at least 15 minutes and consult a doctor immediately if battery acid and battery gases get into the eyes.

NOTE

Environmental hazard 12–V batteries contain environmentally-hazardous materials.

– Do not dispose of 12–V batteries as household waste.
– Dispose of 12–V batteries at a collection point for used batteries.

NOTE

Environmental hazard Hazardous substances cause environmental damage.

– Dispose of oils, grease, filters, fuel, cleaning agents, brake fluid, etc. correctly and in accordance with the applicable regulations.

Note

Even when there is no load on the 12 V battery, it discharges steadily each day.

The charging level and the method of charging are very important for the service life of the 12-V battery.

Rapid recharging with a high charging current shortens the service life of the battery.

If the charging current, charging voltage, and charging time are exceeded, electrolyte escapes through the safety valves. This reduces the capacity of the 12-V battery.

If the 12-V battery is left in a discharged state for an extended period, it will become deeply discharged and sulfating occurs, destroying the battery.

The 12 V battery is maintenance-free. The acid level does not have to be checked.

If the 12-V battery is not charged by the KTM battery charger, the 12-V battery must be removed for charging. Otherwise, overvoltage may damage electronic components.

Preparatory work

– Remove the passenger seat. (p. 152)
– Remove the front rider's seat. (p. 153)

Main work

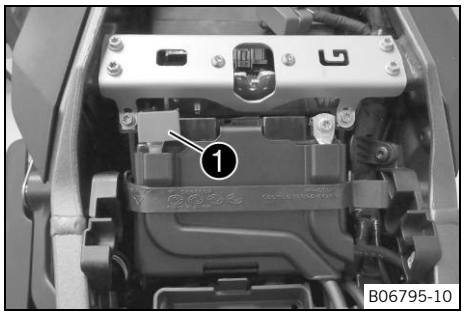

– Remove positive terminal cover ❶.

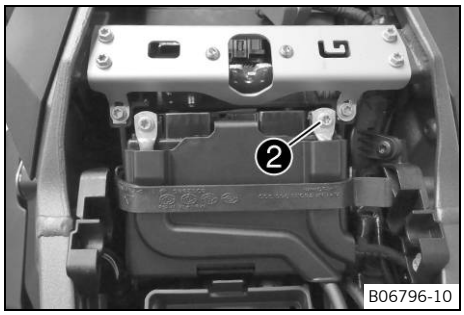

– Disconnect negative cable ❷ from the 12 V battery to avoid damaging the onboard electronics.

S06148-01

– Connect a charger to the 12 V battery. Switch the charger on.

Charge the 12-V battery according to the instructions on the battery housing.

EU battery charger **TecMATE Optimate PRO** (A61029974044)
USA/CA battery charger **TecMATE Optimate PRO** (A61029974144)
Battery charger **TecMATE Optimate PRO** UK (A61029974244)

Note
After charging, the battery charger can remain on the vehicle, ensuring that the battery voltage is maintained during the maintenance charging cycle.

Note
It is impossible to overcharge the 12–V battery using this battery charger.

– Switch off the charger after charging and disconnect from the 12 V battery.

The charging current, charging voltage, and charging time must not be exceeded.	
If the 12 V battery is depleted from starting the vehicle repeatedly, the battery must be charged immediately.	
Recharge the 12 V battery regularly when the motorcycle is not being used.	3 months

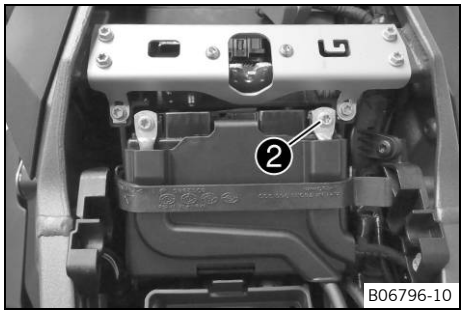

B06796-10

– Connect negative cable ❷ to the 12 V battery.

Screw, battery terminal	
M6×12	4.5 Nm (3.32 ft·lb$_f$)

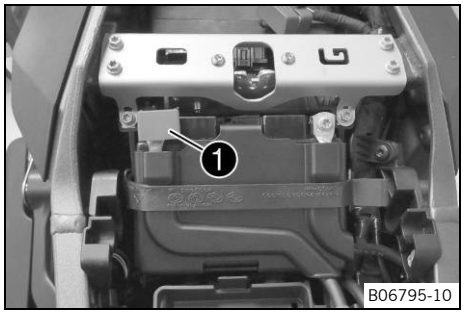

B06795-10

– Mount positive terminal cover ❶.

Reworking

– Mount the front rider's seat. (p. 153)
– Mount the passenger seat. (p. 153)
– Set the time and date. (p. 192)

17.8 Changing the RACE ON key battery

WARNING

Risk of injury Swallowing button cells can lead to chemical burning and may result in death in under 2 hours.

Button cells may burst if misused.

– Keep button cells and the RACE ON key out of the reach of children.
– Make sure the button cells are not swallowed or ingested.
– Seek medical attention immediately if button cells are swallowed or ingested.
– Do not expose button cells to extreme temperatures or mechanical loads.

Permissible temperature	−20 °C … 50 °C (−4.0 °F … 122.0 °F)

– Do not damage the RACE ON key by e.g. cutting or squashing it.
– Do not use the RACE ON key if the RACE ON key is damaged or the battery compartment cannot be closed.
– Replace the RACE ON key battery with the type specified only.

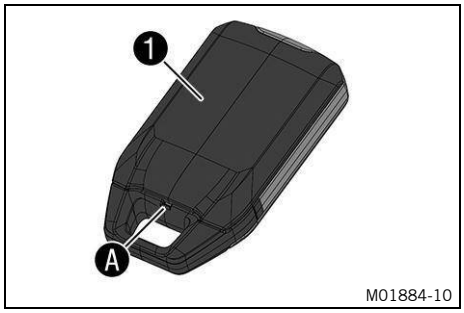

M01884-10

– To open the cover ❶ of the RACE ON key, insert a small, blunt object into opening Ⓐ and carefully lift up the cover.

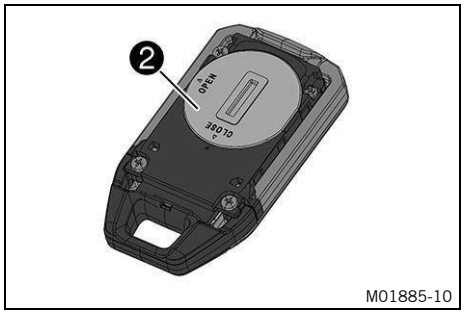

M01885-10

– Using a coin, turn battery cover ❷ counterclockwise and remove it.

Ensure that the O-ring remains in place.

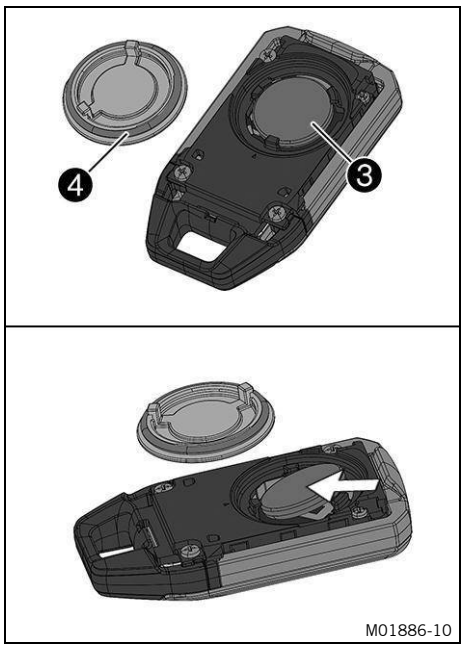

– Remove RACE ON key battery ❸.
– Insert the new RACE ON key battery with label facing upward.

Button cell (CR 2032)

Note
The two smaller holding lugs are tapered so that the RACE ON key battery can be easily pushed into the bracket.

– Mount battery cover with O-ring ❹ and close it clockwise with a coin.
– Mount the cover of the RACE ON key and click into place.

17.9 Changing the main fuse

WARNING
Fire hazard Incorrect fuses overload the electrical system.
– Use only fuses with the prescribed amperage.
– Do not bypass or repair fuses.

Preparatory work
– Remove the passenger seat. (p. 152)
– Remove the front rider's seat. (p. 153)

Main work
– Press the ❶ unlocking mechanism together.
– Remove protection cap ❷.

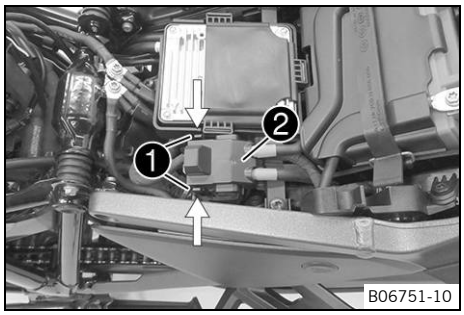

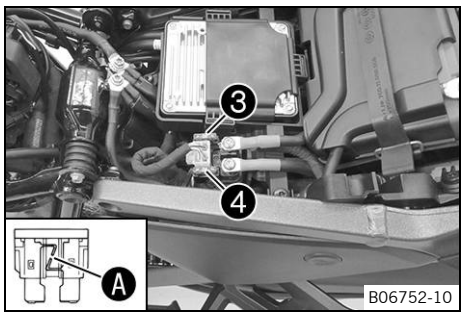

– Remove faulty main fuse ❸.

Note
A faulty fuse has a burned-out fuse wire Ⓐ.
A spare fuse ❹ is located in the starter relay.
The main fuse protects all electrical power loads of the vehicle.

– Insert the main fuse.

Fuse (58011109130)

– Check that the electrical equipment is functioning properly.

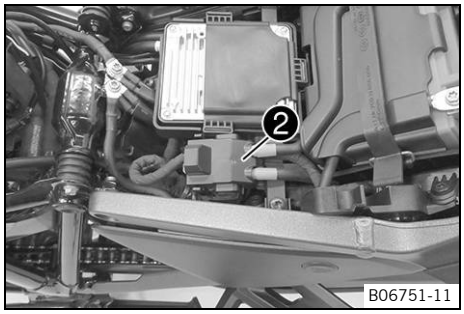

– Mount protection cap ❷.
✓ The protection cap engages with an audible click.

Tip
Insert a new spare fuse into the starter relay to have it available when needed.

Reworking
– Mount the front rider's seat. (p. 153)
– Mount the passenger seat. (p. 153)
– Set the time and date. (p. 192)

17.10 Changing the fuses in the fuse box

WARNING
Fire hazard Incorrect fuses overload the electrical system.
– Use only fuses with the prescribed amperage.
– Do not bypass or repair fuses.

Note
The fuse box containing the fuses of individual electrical power consumers is located under the seat.

Preparatory work
– Remove the passenger seat. (p. 152)
– Remove the front rider's seat. (p. 153)

Main work

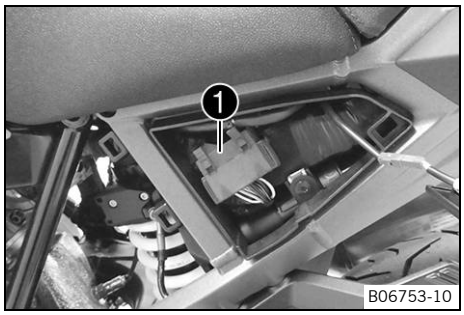

– Open fuse box cover ❶.

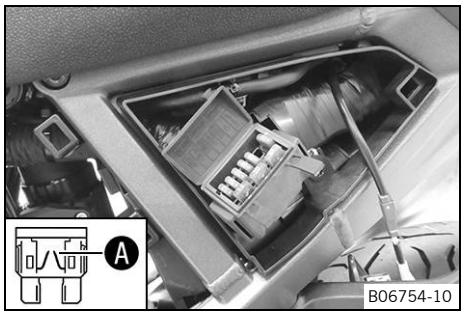

– Check the fuses.

Note
A faulty fuse has a burned-out fuse wire Ⓐ.

– Remove the faulty fuse.

Fuse **1** - 10 A - power supply for control units and components
Fuse **2** - 10 A - permanent positive for auxiliary equipment (accessories circuit 1)
Fuse **3** - 10 A - tail light, license plate lamp
Fuse **4** - 10 A - light control unit
Fuse **5** - 10 A - engine control unit
Fuse **6** - 30 A - ABS return pump
Fuse **7** - 15 A - ABS hydraulic unit
Fuse **8** - 10 A - ignition positive for auxiliary equipment (accessory current circuit 2), USB-C charging port
Fuse **9** -15 A - suspension control unit

– Insert the spare fuse with the correct rating.

Fuse (58011109110)
Fuse (58011109115)
Fuse (58011109130)

Tip
Insert a new spare fuse so that it is available if needed.

– Check the function of the electrical power consumer.
– Close the fuse box cover.

Reworking

– Mount the front rider's seat. (p. 153)
– Mount the passenger seat. (p. 153)

17.11 Checking the headlight setting

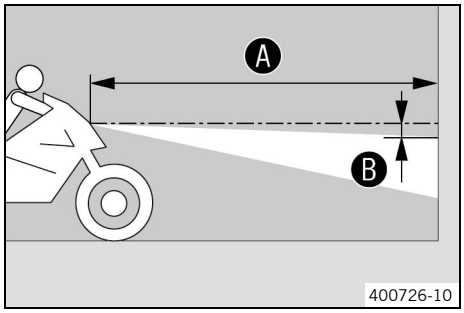

– Park the vehicle on a horizontal surface in front of a light-colored wall and make a mark at the height of the center of the low beam headlight.
– Make another mark at a distance B under the first marking.

Distance B	5 cm (2.0 in)

– Position the vehicle upright at distance A from the wall and switch on the low beam.

Distance A	5 m (16 ft – 5 in)

– Get on the motorcycle, together with any luggage or passenger.
– Check the headlight adjustment.

The light-dark boundary must lie exactly on the lower marking when the motorcycle is ready to operate with the rider mounted along with any luggage and a passenger if applicable.

» If the boundary between light and dark does not meet specifications:
  – Adjust headlight range. (p. 190)

17.12 Adjusting the headlight range

Preparatory work

– Check the headlight setting. (p. 190)

Main work

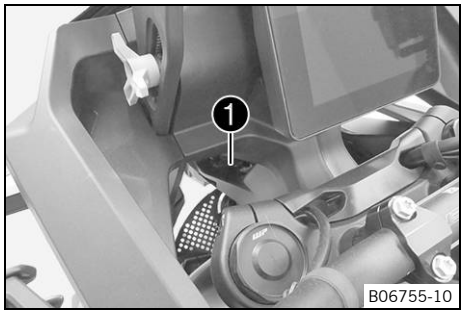

– Turn adjusting wheel 1 to adjust the headlight range.

Note
Turn counterclockwise to increase the headlight range; turn clockwise to reduce the headlight range.
If you have a load, you may have to correct the headlight range.

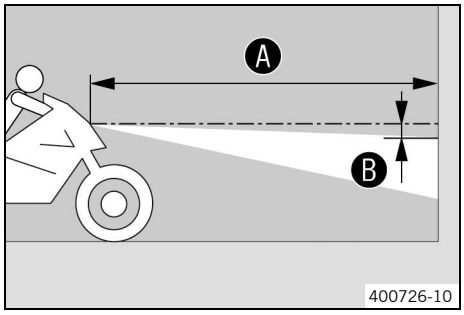

– Park the vehicle on a horizontal surface in front of a light-colored wall and make a mark at the height of the center of the low beam headlight.
– Make another mark at a distance B under the first marking.

Distance B	5 cm (2.0 in)

– Position the vehicle upright at distance A from the wall and switch on the low beam.

Distance A	5 m (16 ft – 5 in)

– Get on the motorcycle, together with any luggage or passenger.

– Check the headlight adjustment.

The light-dark boundary must lie exactly on the lower marking when the motorcycle is ready to operate with the rider mounted along with any luggage and a passenger if applicable.

17.13 Diagnostic connector

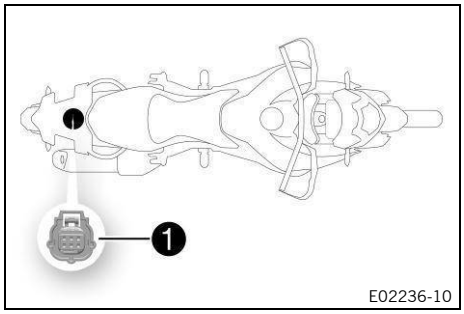

The diagnostics connector ❶ is at the rear part of the vehicle.

17.14 Accessories circuit 1 and accessories circuit 2 front

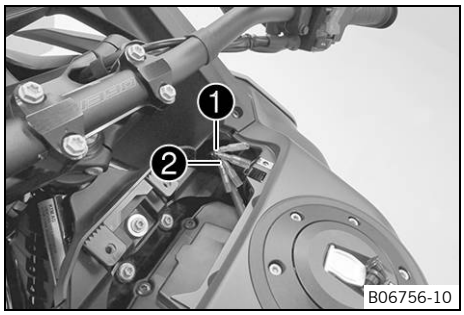

Installation location

- Accessories circuit 1 ❶ and accessories circuit 2 ❷ at the front are located under the storage compartment.

Accessory current circuit 1 max. 10 A/120 Watt
Accessory current circuit 2 max. 15 A/180 Watt

Note

The accessories circuits are protected by a fuse; however, this fuse also protects other electrical power consumers.

The maximum continuous load is therefore significantly lower than the value of the fuse.

Do not use a stronger fuse.

The accessories circuit 1 is switched to permanent positive and connected electrical consumers are permanently supplied with current, regardless of ignition.

The accessories circuit 2 is switched to ignition plus, connected electrical consumers are only supplied with power when the ignition is switched on.

17.15 Accessories circuit 1 and accessories circuit 2, rear

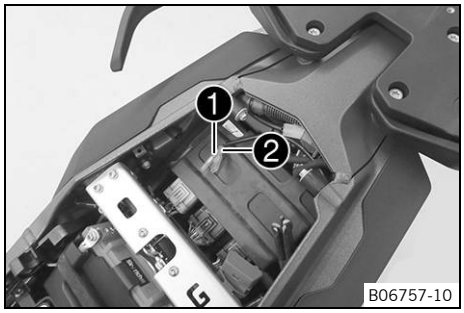

Installation location

- Accessories circuit 1 ❶ and accessories circuit 2 ❷ at the rear are located under the passenger seat.

Accessory current circuit 1 max. 10 A/120 Watt
Accessory current circuit 2 max. 15 A/180 Watt

Note

The accessories circuits are protected by a fuse; however, this fuse also protects other electrical power consumers.

The maximum continuous load is therefore significantly lower than the value of the fuse.

Do not use a stronger fuse.

The accessories circuit 1 is switched to permanent positive and connected electrical consumers are permanently supplied with current, regardless of ignition.

The accessories circuit 2 is switched to ignition plus, connected electrical consumers are only supplied with power when the ignition is switched on.

17.16 Setting the time and date

Condition: Motorcycle is stationary

– Press the **SET** button when the menu is closed or use the **Touchscreen**.

Note

If the **Splitscreen** is open, press and hold the **SET** button.

– Press the **UP** or **DOWN** button until **SETTINGS** appears or use the **Touchscreen**.
– The menu can be opened by pressing the **SET** button or by using the **Touchscreen**.
– Press the **UP** or **DOWN** button until **CLOCK & DATE** is highlighted or use the **Touchscreen**.
– The sub-menu can be opened by pressing the **SET** button or by using the **Touchscreen**.

I01728-01

Setting the clock

- Press the **UP**or **DOWN** button until **SET CLOCK** is highlighted or use the **Touchscreen**.
- The sub-menu can be opened by pressing the **SET** button or by using the **Touchscreen**.
- Press the **UP**or **DOWN** button until the hours or minutes are highlighted or use the **Touchscreen**.
- Press the **RIGHT** or **LEFT** button to set the hours or minutes. Press the **SET** button to confirm the selection or use the **Touchscreen**.
- Press the **BACK** button to close the sub-menu or use the **Touchscreen**.

I01729-01

Setting the date

- Press the **UP**or **DOWN** button until **SET DATE** is highlighted or use the **Touchscreen**.
- The sub-menu can be opened by pressing the **SET** button or by using the **Touchscreen**.
- Press the **UP**or **DOWN** button until the day, month or year is highlighted or use the **Touchscreen**.
- Press the **RIGHT** or **LEFT** button to set the day, month or year. Press the **SET** button to confirm the selection or use the **Touchscreen**.
- Press the **BACK** button to close the sub-menu or use the **Touchscreen**.

17.17 Adaptive cruise control system (optional)

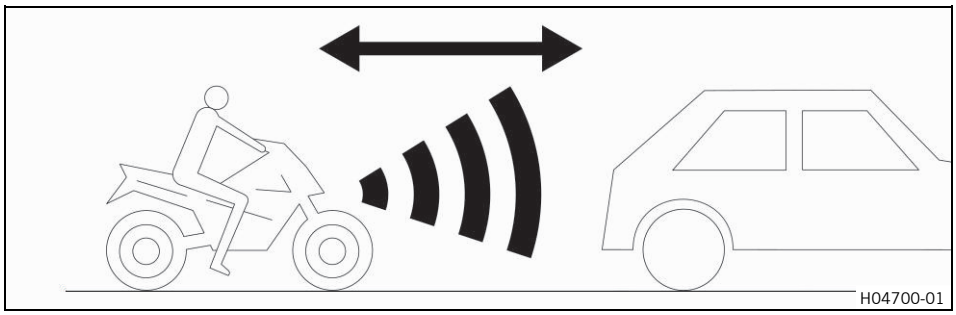

WARNING

Danger of accidents The adaptive cruise control function (ACC) is not suitable for all riding situations.
The rider is always responsible for safe operation of the vehicle.
The ACC is not for avoiding collisions.
The ACC is limited to approx. 50 % of maximum brake power.
No further automatic delay occurs below the minimum speed.
The ACC does not record objects with a high relative speed, e.g. stationary or oncoming vehicles.
The ACC does not record vehicles with a narrow silhouette, e.g. bicycles.
The selected cruise speed will not be reached if the engine power is not sufficient for a gradient.
The selected cruise speed will be exceeded if the engine braking effect and the ACC brake power are not sufficient on an incline.
ACC detects vehicles ahead less well when the vehicle is at a sharp lean angle.

Area of application of the ACC	≤ 180 km/h (≤ 111.8 mph)

- Always stay attentive and be ready to brake.
- Intervene when ACC fails to detect a vehicle or obstacle, a warning is displayed on the combination instrument or the minimum speed is reached.
- Do not use the ACC on winding roads.
- Do not use the ACC on slippery road surfaces (e.g. rain, ice or snow), where there is poor visibility or on unpaved surfaces (e.g. sand, stones or gravel).
- Do not use the ACC in heavy traffic with other vehicles frequently changing lanes.
- Observe the legal minimum distance to vehicles driving ahead.

The adaptive cruise control system (ACC) (optional) provides a convenient feature that supports the rider.
The vehicle is equipped with a front radar sensor (optional). As a result, a speed-dependent distance from the vehicle ahead can be maintained.
When the ACC is active, the vehicle accelerates when the turn signal is actuated to facilitate overtaking.

Note

In due course, the ACC (optional) detects whether the vehicle is moving in right or left-hand traffic, and adjusts the overtake detection accordingly.

Tip

When using the ACC, it is recommended that you activate the automatic mode **Standard** (optional) of the preload adjuster at the same time.

Due to the automatic adjustment of the spring preload, the front radar sensor remains in the optimal detection angle.

If the **Standard** preload adjuster mode (optional) is not available, it is recommended that the preload adjuster be correctly adjusted to the current load.

Information about ACC (optional) is listed in the following sections:

- Operation of the adaptive cruise control (**ACC**)
- Adaptive cruise control indicator (**ACC**)
- Dashboard menu **Radar Assistance**

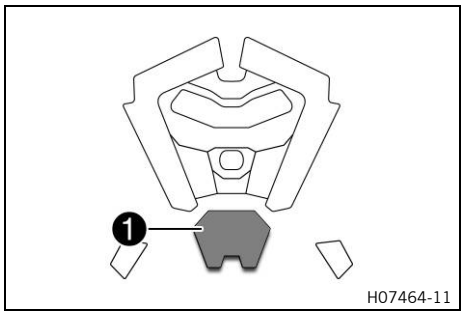

The front radar sensor **(FRS) (optional)** 1 of the ACC is located in the headlight mask.

Note
If the front radar sensor (optional) is contaminated or iced up, its function may be limited.
The front radar sensor (optional) must not be covered, glued or painted.

If there is a malfunction in the adaptive cruise control (optional), the regular cruise control function can still be used.

Note
In this case, ACC mode must be manually changed on the combination instrument.

The ACC (optional) can only be used in ride modes **Sport**, **Street** and **Rain**.
As the lean angle increases, the maximum acceleration and deceleration is reduced to the cruise speed in all ACC modes.
In the ACC modes **Comfort** and **CC only** the speed is reduced on the open road as the lean angle increases. There is no reduction in **Sport** ACC mode.

Note
When riding at slow speeds, keep the motorcycle stable due to limited lateral stabilization.

18.1 Checking the coolant level in the compensating tank

WARNING

Health hazard Coolant is harmful to health.

- Keep coolant out of the reach of children.
- Do not allow coolant to come into contact with skin, eyes, or clothing.
- Consult a doctor immediately if coolant has been ingested.
- Rinse the affected area immediately with plenty of water in the event of contact with skin.
- Rinse eyes thoroughly with water and consult a doctor immediately if coolant comes into contact with eyes.
- If coolant spills on to your clothing, change the clothing.
- Store coolant properly in a suitable container and keep out of the reach of children.

WARNING

Danger of scalding The coolant heats up and is under high pressure when the vehicle is operated.

- Do not open the radiator, the radiator hoses, or other cooling system components if the engine or the cooling system are at operating temperature.
- Allow the cooling system and the engine to cool down before you open the radiator, the radiator hoses, or other components of the cooling system.
- In the event of scalding, rinse the area affected immediately with lukewarm water.

Condition: The engine is cold

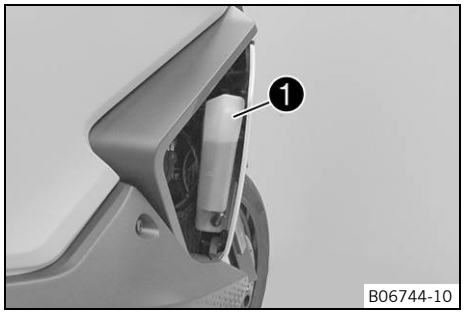

- Park the motorcycle on a horizontal surface.
- Check the coolant level in compensating tank 1.

  The coolant level must be between **min** and **max**.

  » If there is no coolant in the compensating tank:
  - Check the transmission and cooling system for leaks.

    Do not start the motorcycle.
  - Add the coolant/bleed the cooling system.

  » If the coolant level in the compensating tank is not at the required level, but the tank is not empty:
  - Correct the coolant level in the compensating tank. (p. 196)

18.2 Correcting the coolant level in the compensating tank

WARNING

Health hazard Coolant is harmful to health.

- Keep coolant out of the reach of children.
- Do not allow coolant to come into contact with skin, eyes, or clothing.
- Consult a doctor immediately if coolant has been ingested.
- Rinse the affected area immediately with plenty of water in the event of contact with skin.
- Rinse eyes thoroughly with water and consult a doctor immediately if coolant comes into contact with eyes.
- If coolant spills on to your clothing, change the clothing.
- Store coolant properly in a suitable container and keep out of the reach of children.

WARNING

Danger of scalding The coolant heats up and is under high pressure when the vehicle is operated.

- Do not open the radiator, the radiator hoses, or other cooling system components if the engine or the cooling system are at operating temperature.
- Allow the cooling system and the engine to cool down before you open the radiator, the radiator hoses, or other components of the cooling system.
- In the event of scalding, rinse the area affected immediately with lukewarm water.

Condition: The engine is cold, Radiator is completely full

Preparatory work

- Check the coolant level in the compensating tank. (p. 196)
- Remove front right wing.

Main work

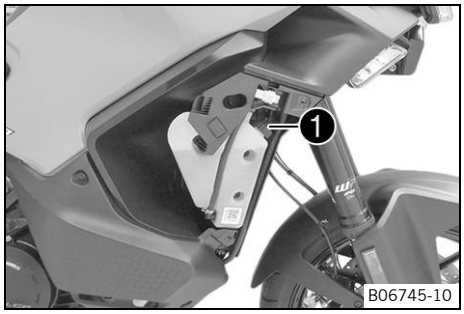

- Remove compensating tank cover 1.
- Add coolant until the coolant reaches the specified level.

The coolant level must be between **min** and **max**.

coolant	
Coolant (p. 238) Antifreeze protection to at least: −25 °C (−13.0 °F)	2 l (0.5 liq. gal_{US})

- Mount cover 1 of the compensating tank.

Reworking

- Install the front right wing.

19.1 Ride Mode

I01775-01

WARNING

Danger of accidents An incorrectly selected ride mode makes it more difficult to control the vehicle.

The riding modes are each only suitable for certain conditions.

– Always select a riding mode that suits the surface on which you are riding, the weather and the riding situation.

Various vehicle tunings can be selected in menu **Ride Mode**. **SPORT**, **STREET**, **RAIN**, **OFFROAD** and **RALLY** (optional) are available.

Condition	Meaning
SPORT	Homologated performance with very direct response; the motorcycle traction control allows greater slip on the rear wheel.
STREET	Homologated performance with balanced response; the motorcycle traction control allows normal slip on the rear wheel.
RAIN	Reduced homologated performance with soft response for improved rideability on surfaces with low road grip; the motorcycle traction control allows very little slip on the rear wheel.
OFFROAD	Reduced homologated performance for better rideability on unpaved roads; the motorcycle traction control allows high slip on the rear wheel.
RALLY (optional)	Homologated performance and extremely direct response. The motorcycle traction control and the characteristics of the throttle response can be set individually.

The most recently selected ride mode is displayed on the combination instrument.
The riding mode can also be changed while riding with a closed throttle and deactivated cruise control.

19.2 Motorcycle traction control

I01765-01

The motorcycle traction control (**MTC**) lowers the engine torque in case of loss of traction in the rear wheel. Depending on the riding mode (p. 198), different amounts of slip are allowed when traction control is activated.

Note

When motorcycle traction control is switched off, the rear wheel may spin during strong acceleration and on surfaces with low grip, resulting in a risk of falling.

After the ignition is switched on, motorcycle traction control is enabled again.

The motorcycle traction control is adjusted using the **Motorcycle** menu on the combination instrument. The motorcycle traction control can be switched off in the **MTC** menu.

Note

When the motorcycle traction control is active, TC indicator lamp flashes.

When the motorcycle traction control is switched off, TC indicator lamp lights up.

19.3 slip adjustment (optional)

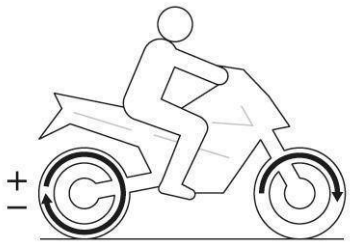

I00800-10

The spin adjuster is a motorcycle traction control function.

The slip adjustment allows the motorcycle traction control to be tuned through nine levels to the desired characteristic map.

Level 1 allows the maximum slip on the rear wheel, and level 9 the minimum.

The slip adjuster can be set while riding using the **+RES** or **–SET** button when the menu is closed, or using the **RIGHT** or **LEFT** button when the menu is open.

Note

The slip adjustment is only available in **Rally** riding mode (optional).

19.4 Throttle Response (optional)

I01650-01

In the combination instrument the characteristics of the throttle response can be adjusted via the **Throttle Response** submenu.

The **Throttle Response** can also be set while riding with a closed throttle grip.

Note

Throttle Response is only available in riding mode **Rally** (optional).

Condition	Meaning
RALLY	Extremely direct response
SPORT	Very direct response
STREET	Balanced response

20.1 Checking the engine oil level

Note
Oil consumption depends on the riding style and the operating conditions.

Condition: The engine is at operating temperature

Preparatory work
– Stand the motorcycle upright on a level surface.

Main work
– Check the engine oil level in the engine oil level viewer.

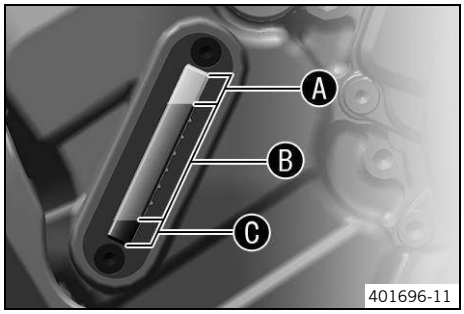

After switching off the engine, wait one minute before checking the level.
The engine oil level should be in the upper part of the range B of the engine oil level viewer.

» When the engine oil level is in area A of the engine oil level viewer:
  – Do not add engine oil.
» When the engine oil level is in area B of the engine oil level viewer:
  – Engine oil can be added.
» When the engine oil level is in area C of the engine oil level viewer:
  – Add engine oil. (p. 205)

20.2 Changing the engine oil and oil filter, cleaning the oil screens

WARNING
Danger of scalding Engine and gear oil heat up when the motorcycle is operated.
– Wear suitable protective clothing and safety gloves.
– In the event of scalding, rinse the area affected immediately with lukewarm water.

NOTE
Environmental hazard Hazardous substances cause environmental damage.
– Dispose of oils, grease, filters, fuel, cleaning agents, brake fluid, etc. correctly and in accordance with the applicable regulations.

Preparatory work
– Remove the skid plate. (p. 160)
– Remove the oil plug cover. (p. 161)

Main work

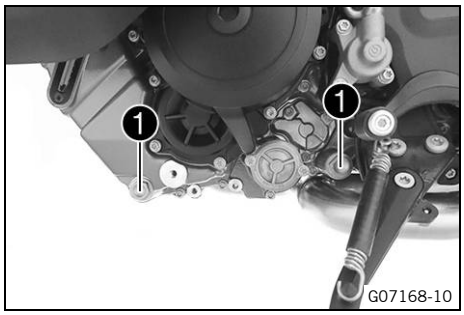

- Stand the motorcycle on a level surface using the side stand.
- Position an appropriate container under the engine.
- Remove oil drain plugs ❶ along with the magnets, the O-rings, and the oil screens.

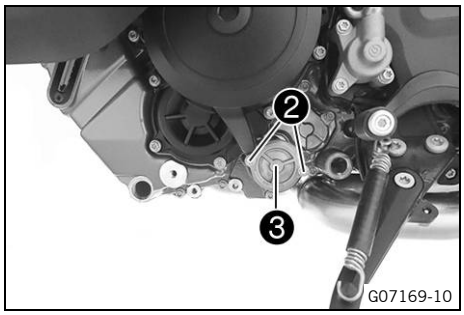

- Remove screws ❷. Take off oil filter cover ❸ with the O-ring.

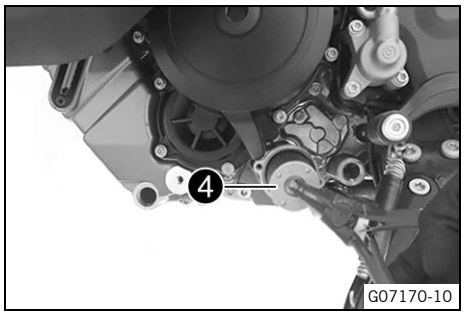

- Pull oil filter ❹ out of the oil filter housing.

Lock ring plier (51012011000)

- Allow the engine oil to drain completely.
- Thoroughly clean the parts and the sealing surface.

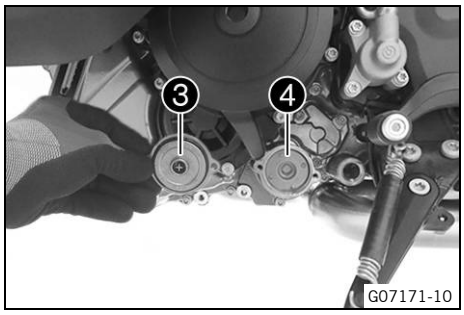

- Insert new oil filter ❹.

Only insert the oil filter by hand.

- Oil the O-ring of the oil filter cover. Mount oil filter cover ❸.

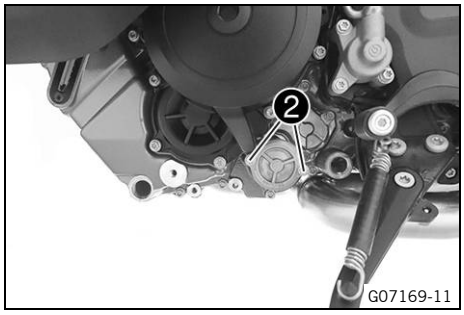

- Mount and tighten screws ❷.

Remaining screws for engine	
M5	6 Nm (4.4 ft·lb$_f$)

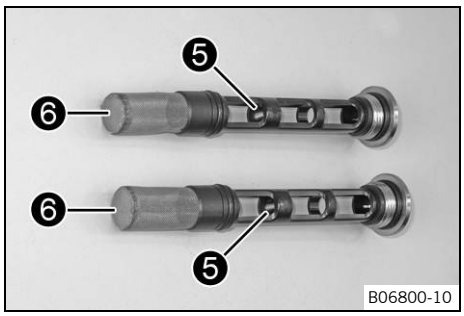

– Thoroughly clean magnets ❺ and oil screens ❻ of the oil drain plugs.

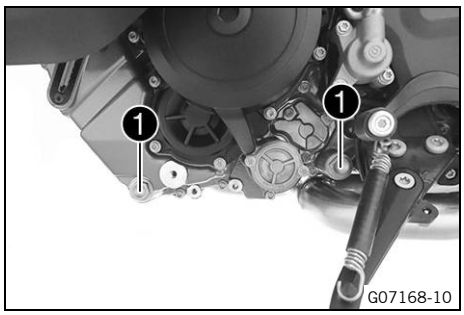

– Mount and tighten oil drain plugs ❶ with magnets, O-rings, and oil screens.

Oil drain plug	
M20×1.5	20 Nm (14.8 ft·lb$_f$)

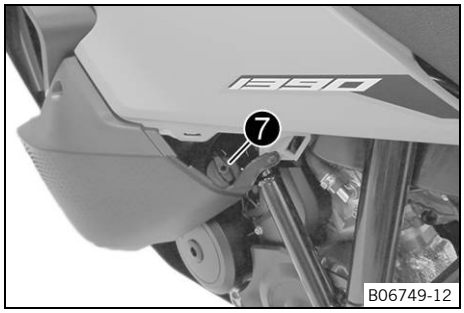

– Have the entire filling quantity available.

engine oil	
Ambient temperature: ≥ 0 °C (≥ 32.0 °F) engine oil (SAE 10W/50) (p. 237) fully synthetic	3.50 l (0.925 liq. gal$_{US}$)
Ambient temperature: < 0 °C (< 32.0 °F) engine oil (SAE 5W/40) (p. 237) fully synthetic	

– Add the oil quantity in two steps.
– Remove filler plug ❼ with the O-ring, and fill up with the first partial quantity.

Engine oil (1st partial quantity) approx.	
Ambient temperature: ≥ 0 °C (≥ 32.0 °F) engine oil (SAE 10W/50) (p. 237) fully synthetic	3.0 l (0.79 liq. gal$_{US}$)
Ambient temperature: < 0 °C (< 32.0 °F) engine oil (SAE 5W/40) (p. 237) fully synthetic	

– Mount filler plug ❼ with the O-ring.

DANGER

Danger of poisoning Exhaust gases are toxic and inhaling them may result in unconsciousness and death.

- Always ensure that there is sufficient ventilation when running the engine.
- Use suitable exhaust extraction when starting or running the engine in an enclosed space.

- Start the engine and check it for leaks.
- Switch off the engine.

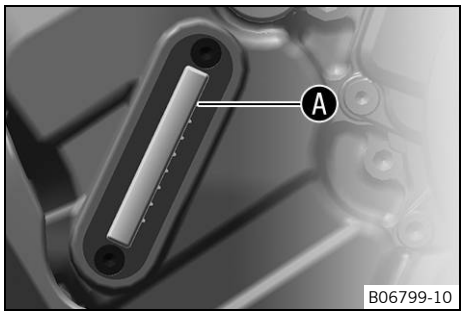

- Remove the filler plug with the O-ring and add the second partial quantity up to the upper marking A on the engine oil level viewer.

Engine oil (2nd partial quantity) approx.	
Ambient temperature: ≥ 0 °C (≥ 32.0 °F) engine oil (SAE 10W/50) (p. 237) fully synthetic	0.50 l (0.132 liq. gal_{US})
Ambient temperature: < 0 °C (< 32.0 °F) engine oil (SAE 5W/40) (p. 237) fully synthetic	

- Mount the filler plug with the O-ring.

DANGER

Danger of poisoning Exhaust gases are toxic and inhaling them may result in unconsciousness and death.

- Always ensure that there is sufficient ventilation when running the engine.
- Use suitable exhaust extraction when starting or running the engine in an enclosed space.

- Start the engine and check it for leaks.

Reworking

- Check the engine oil level. (p. 201)
- Install the oil plug cover. (p. 161)
- Install the skid plate. (p. 160)

20.3 Adding engine oil

Note
Too little engine oil or poor-quality engine oil results in premature wear to the engine.
The engine may be damaged if the engine oil level is too high.

Condition: The engine is at operating temperature

Preparatory work

– Stand the motorcycle upright on a level surface.
– Check the engine oil level. (p. 201)
– Remove the oil plug cover. (p. 161)

Main work

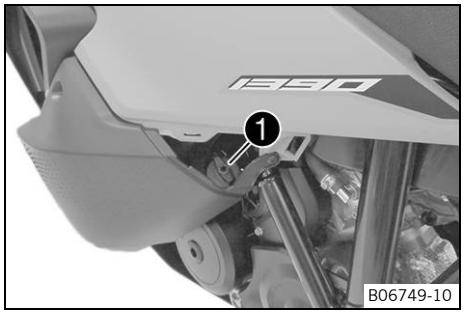

– Remove oil plug 1 with O-ring.

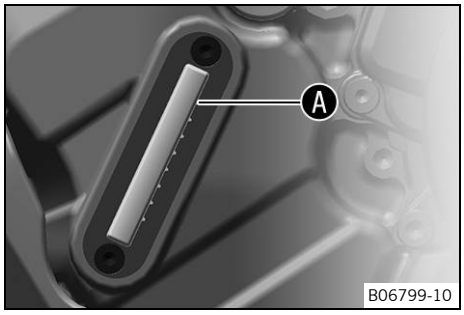

– Add the engine oil to upper marking A on the engine oil level viewer.

Condition: Ambient temperature: ≥ 0 °C (≥ 32.0 °F)
engine oil (SAE 10W/50) (p. 237) fully synthetic
Condition: Ambient temperature: < 0 °C (< 32.0 °F)
engine oil (SAE 5W/40) (p. 237) fully synthetic

Note
In order to achieve optimal engine oil performance, it is not advisable to mix different engine oils.
KTM recommends changing the engine oil if necessary.

– Mount the filler plug with the O-ring.

DANGER
Danger of poisoning Exhaust gases are toxic and inhaling them may result in unconsciousness and death.
– Always ensure that there is sufficient ventilation when running the engine.
– Use suitable exhaust extraction when starting or running the engine in an enclosed space.

– Start the engine and check it for leaks.

Reworking

– Check the engine oil level. (p. 201)
– Install the oil plug cover. (p. 161)

21.1 Cleaning the motorcycle

NOTE

Material damage Components can be damaged or destroyed if a high-pressure cleaner is used incorrectly.

The high pressure forces water into the electrical components, socket connectors, clutch cables, and bearings, etc.

Too high a pressure can cause malfunctions and destroy components.

– Do not direct the water jet directly on to electrical components, socket connectors, clutch cables, or bearings.
– Maintain a minimum distance between the nozzle of the high-pressure cleaner and the component.

Minimum distance	60 cm (23.6 in)

NOTE

Environmental hazard Hazardous substances cause environmental damage.

– Dispose of oils, grease, filters, fuel, cleaning agents, brake fluid, etc. correctly and in accordance with the applicable regulations.

Note

Clean the motorcycle regularly to maintain its value and appearance over a long period.

Avoid direct sunshine when cleaning the motorcycle.

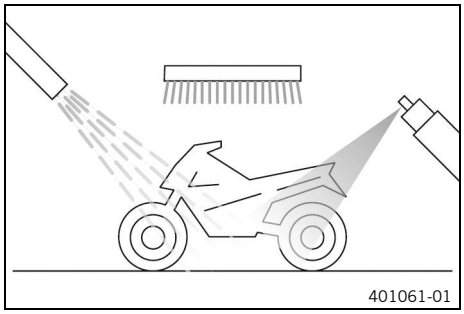

– Seal the exhaust system to prevent water from entering into it.
– Remove loose dirt first with a soft jet of water.
– Spray the heavily soiled parts with a standard commercial motorcycle cleaner and clean using a brush.

Never apply motorcycle cleaner to a dry vehicle; always rinse the vehicle with water first.

Environmentally neutral universal cleaning agent
(p. 239)

Note

Use warm water containing standard motorcycle cleaner and a soft sponge.

If the vehicle was driven in road salt, clean it with cold water. Warm water would enhance the corrosive effects of salt.

– After rinsing the motorcycle with a gentle spray of water, allow it to dry thoroughly.
– Remove the cover from the exhaust system.

WARNING

Danger of accidents Moisture and dirt impair the brake system.

– Brake carefully several times to dry out and remove dirt from the brake pads and the brake discs.

– After cleaning, ride the vehicle a short distance until the engine warms up.

Note
The heat produced causes water to evaporate at inaccessible locations in the engine and on the brake system.

– Push back the protection caps of the handlebar controls to allow any water that has penetrated to evaporate.
– After the motorcycle has cooled off, lubricate all moving parts and pivot points.
– Clean the chain. (p. 154)

WARNING
Danger of accidents Oil, grease or wax on the brake discs reduces the brake action.
– Always keep the brake discs free of oil, fat and wax.
– Clean the brake discs with brake cleaner when necessary.

– Treat bare metal (except for brake discs and the exhaust system) with an anticorrosive.

Preserving materials (p. 239)

– Treat the painted parts with a mild paint polish.

Do not polish parts that were matte when delivered as this would strongly impair the material quality.

Shine spray with beading effect (p. 239)

– Treat the plastic parts and powder-coated parts with a mild cleaning and care product.

Cleaning agents for plastics, glass, lacquers, metals, windshields and visors (p. 239)

– Oil the ignition and steering lock, tank lock, and seat lock.

Universal oil spray (p. 237)

21.2 Checks and maintenance steps for winter operation

WARNING
Danger of accidents Salt on the roads impairs the brake system.
– Brake carefully several times to remove salt from the brake linings and the brake discs.

WARNING
Danger of accidents Oil, grease or wax on the brake discs reduces the brake action.
– Always keep the brake discs free of oil, fat and wax.
– Clean the brake discs with brake cleaner when necessary.

Note
If you use the motorcycle in winter, salt can be expected on the roads. You should therefore take precautions against aggressive road salt.

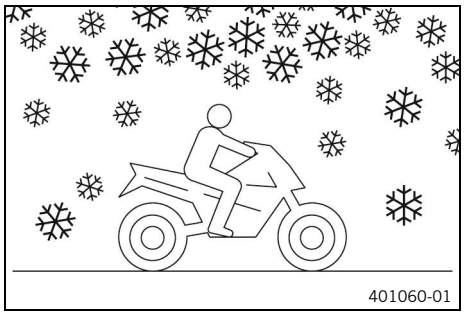

– Clean the motorcycle. (p. 207)
– Clean brake system.

After every trip on salted roads, thoroughly wash the brake calipers and brake pads with cold water and dry carefully. This should be done after the parts are cooled down and while they are installed.
After riding on salted roads, thoroughly clean the vehicle with cold water and dry it well.

Note
Warm water enhances the corrosive effects of salt.

– Treat the engine, swingarm, and all other bare or zinc-plated parts (except the brake discs) with a wax-based anticorrosive.

Corrosion inhibitor must not come into contact with the brake discs. This would severely lower the braking effect.

– Clean the chain. (p. 154)

22.1 Storage

Note

If the vehicle will not be ridden for an extended period, additional steps are recommended.

Before storing the motorcycle, check all parts for function and wear. If service, repairs, or replacements are necessary, you should do this during the storage period (workshops less busy). This allows you to avoid long waiting periods when the next season starts.

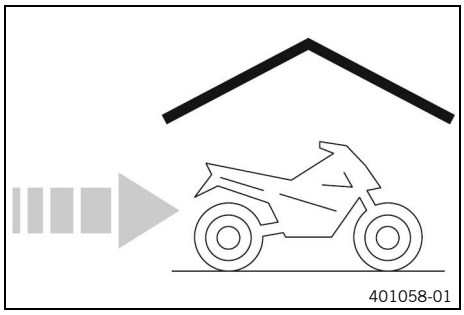

- When refueling for the last time before taking the motorcycle out of service, add fuel additive.

Fuel additive (p. 236)

- Refuel. (p. 145)

Tip

Fill the fuel tank completely as specified, using fuel with the lowest possible ethanol content.

- Clean the motorcycle. (p. 207)
- Change the engine oil and the oil filter, clean the oil screens. (p. 201)
- Check the coolant fill level and antifreeze.
- Check the tire pressure. (p. 178)
- Remove the 12 V battery. (p. 181)

Storage temperature of the 12 V battery without direct sunlight	0 °C … 35 °C (32.0 °F … 95.0 °F)

- Charge the 12 V battery. (p. 183)
- Store the vehicle in a dry location that is not subject to large fluctuations in temperature.
- Raise the motorcycle with the rear lifting gear. (p. 151)
- Lift the motorcycle with the front lifting gear. (p. 151)

Cover the motorcycle with a tarp or cover that is permeable to air.
Do not use non-porous materials because they prevent humidity from escaping and thus cause corrosion.

Note

Avoid running the engine of a motorcycle in storage for a short time only. Since the engine cannot warm up properly, the water vapor produced during combustion condenses and causes valves and the exhaust system to rust.

22.2 Preparing for use after storage

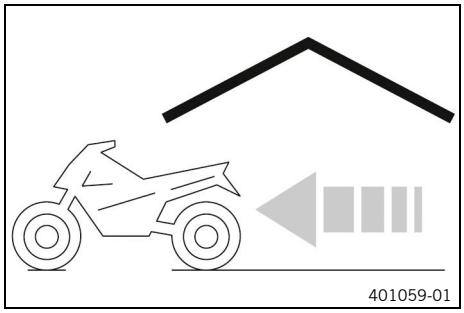

- Take the motorcycle off the front lifting gear. (p. 152)
- Remove the rear of the motorcycle from the lifting gear. (p. 151)
- Install the 12 V battery. (p. 182)

Note
If the 12 V battery was removed, the time and date must be reset.

- Perform checks and maintenance measures when preparing for use. (p. 136)
- Take a test ride.

S06426-10

The RACE ON indicator lamp ❶ can indicate malfunctions by flashing. These are indicated up to five seconds after the RACE ON button is actuated.

Note
Blink codes referring to **KTM RACE ON** are only displayed once and are not repeated.

23.1 Symptoms

Cause	Finding	Remedy
No response if the RACE ON button is pressed	RACE ON button faulty	– Check the RACE ON button for damage. – Check the cable and the plug of the RACE ON button for damage.
RACE ON indicator lamp flashes twice	No response signal from the RACE ON key	– Ensure that the RACE ON key anti-relay attack mode has been deactivated. – Ensure that the RACE ON key is in range. – Remove other electronic devices from the vicinity of the RACE ON antenna. – Check the battery compartment in the RACE ON key for correct locking. – Check the battery compartment of the RACE ON key for corrosion. – Change the RACE ON key battery. (p. 186) – Hold RACE ON chip or RACE ON key directly to the **vehicle antenna**.
RACE ON indicator lamp flashes three times	12 V battery discharged	– Charge the 12 V battery. (p. 183) – Check the open-circuit current.
RACE ON indicator lamp flashes four times	Steering lock bolt locked or tense	– Move handlebar slightly.
RACE ON indicator lamp flashes five times	RACE ON antenna defective	– Check the RACE ON antenna for damage.
RACE ON indicator lamp flashes six times	Anti-relay attack mode on RACE ON key could not be activated.	– Switch the ignition on and off again while the RACE ON key is within range of the vehicle.
RACE ON indicator lamp flashes seven times	Electronic fault	– Read out the fault memory using the diagnostics tool.
The dashboard shows nothing on the display	Fuse **1** blown Main fuse blown 12 V battery discharged	– Change the fuses in the fuse box. (p. 188) – Change the main fuse. (p. 187) – Charge the 12 V battery. (p. 183) – Check the open-circuit current.

Cause	Finding	Remedy
Engine does not rotate if the start button/emergency OFF switch is pressed into the lower position	Operating error 12 V battery discharged Faulty safety starting system Electronic fault	– Carry out the starting procedure. (p. 136) – Charge the 12 V battery. (p. 183) – Check the open-circuit current. – Read out the fault memory using the diagnostics tool. – Read out the fault memory using the diagnostics tool.
The engine only turns over if the clutch lever is pulled	The vehicle is in gear Faulty safety starting system	– Shift the transmission into the neutral position N. – Read out the fault memory using the diagnostics tool.
The engine turns over although a gear is engaged	Faulty safety starting system Faulty clutch switch	– Read out the fault memory using the diagnostics tool. – Check the clutch switch.
The engine turns but does not start	Quick-lock coupling not joined Malfunction in the electronic fuel injection The fuel quality is insufficient Fuel petcocks are closed	– Join quick-lock couplings. – Read out the fault memory using the diagnostics tool. – Add suitable fuel. – Open fuel cocks.
The engine dies during the trip	Lack of fuel Malfunction in the electronic fuel injection	– Refuel. (p. 145) – Read out the fault memory using the diagnostics tool.
Malfunction indicator light lights up	Malfunction in the electronic fuel injection	– Read out the fault memory using the diagnostics tool.
The ABS warning light lights up	ABS fuse blown Large difference in wheel speeds of the front and rear wheels Wheel speed sensor wheel bent or damaged Malfunction in ABS	– Change the fuses in the fuse box. (p. 188) – Stop the vehicle, switch off the ignition, and start it again. – Check the wheel speed sensor wheel for damage. – Read out the fault memory using the diagnostics tool.
High oil consumption	The engine oil level is too high The engine oil is too thin (low viscosity)	– Check the engine oil level. (p. 201) – Change the engine oil and the oil filter, clean the oil screens. (p. 201)
12 V battery discharged	An electrical load is connected to the ACC1/ACC2. The hazard warning flasher is switched on The 12-V battery is not being charged by the alternator Ignition was not switched off when vehicle was parked	– Disconnect the electrical load from the ACC1/ACC2. – Charge the 12 V battery. (p. 183) – Switch off the hazard warning flasher. – Charge the 12 V battery. (p. 183) – Check the charging voltage. – Charge the 12 V battery. (p. 183)

24.1 Engine

24.1.1 Technical data - engine

Design	2-cylinder 4-stroke Otto engine, 75° V arrangement, water-cooled
Displacement	1,349.5 cm³ (82.352 in³)
Stroke	71 mm (2.80 in)
Bore	110 mm (4.33 in)
Compression ratio	13:1
idle speed	1,400 rpm … 1,500 rpm (23.33 Hz … 25.00 Hz)
Control	DOHC with cam lever, 4 valves per cylinder, chain-driven
Valve - valve plate diameter	
Intake	42 mm (1.65 in)
Exhaust	34 mm (1.34 in)
Valve clearance	
Intake at: 20 °C (68.0 °F)	0.10 mm … 0.15 mm (0.0039 in … 0.0059 in)
Exhaust at: 20 °C (68.0 °F)	0.25 mm … 0.30 mm (0.0098 in … 0.0118 in)
Crankshaft bearing	Plain bearing
big (bottom) end bearing	Plain bearing
Wrist pin bearing	Connecting rod bushing
Piston	Forged light alloy
Piston ring	1 upper compression (rectangular) ring, 1 lower compression ring, 1 oil scraper ring
Engine lubrication	Forced oil lubrication with three trochoidal pumps
Primary transmission	40:76
Clutch	Multi-disc wet clutch / hydraulically activated
Transmission	6 speed transmission, claw shift
Gear ratios	
1st gear	12:35
2nd gear	15:32
3rd gear	18:30
4th gear	20:27
5th Gear	24:27
6th Gear	35:32
Mixture formation	Electronic fuel injection
Ignition system	Contactless controlled fully electronic ignition with digital ignition adjustment

Alternator	Mitsuba 36 A (14 V)
Spark plug	
Inside spark plug	NGK LKAR9DI-10
Outside spark plug	NGK LMAR7DI-10
Plug gap of spark plug	1 mm (0.04 in)
Cooling	Liquid cooling, permanent circulation of coolant by water pump
Starting aid	Starter motor

24.1.1.1 Capacities - cooling system

coolant	
Coolant (p. 238) Antifreeze protection to at least: −25 °C (−13.0 °F)	2 l (0.5 liq. gal_{US})

24.1.1.2 Capacities - engine

engine oil	
Ambient temperature: ≥ 0 °C (≥ 32.0 °F) engine oil (SAE 10W/50) (p. 237) fully synthetic	3.50 l (0.925 liq. gal_{US})
Ambient temperature: < 0 °C (< 32.0 °F) engine oil (SAE 5W/40) (p. 237) fully synthetic	

24.2 Chassis

24.2.1 Technical data - chassis

Frame	Lattice frame made of chrome molybdenum steel tubing, powder-coated
Fork	**WP Suspension Semi–active Suspension**
Shock absorber	**WP Suspension Semi–active Suspension**
Suspension travel:	
front	200 mm (7.87 in)
rear	205 mm (8.07 in)
Brake system	
front	Double disc brake with radially mounted four-piston brake calipers, floating brake discs
rear	Single disc brake with dual-piston brake caliper, floating brake disc
Brake discs - diameter	
front	320 mm (12.60 in)
rear	267 mm (10.51 in)

Brake disc wear limit	
front	4 mm (0.16 in)
rear	4.5 mm (0.177 in)
Tire pressure, solo / with passenger / full payload	
front: with cold tires	2.4 bar (34.8 psi)
rear: with cold tires	2.9 bar (42.1 psi)
Final drive	17:42 **Note** Modifications to the transmission ratio are not permitted and can lead to malfunctions.
Chain	5/8 x 5/16” (525) X–ring
Steering head angle	65.2° (1.138 rad)
Wheelbase	1,558 mm (61.34 in)
Seat Height unloaded	847/867 mm (0.0385 in)
Ground clearance unloaded	225 mm (8.86 in)
Weight without fuel approx.	227 kg (500.4 lb)
Maximum permissible front axle load	175 kg (385.8 lb)
Maximum permissible rear axle load	300 kg (661.4 lb)
Maximum permissible total weight	475 kg (1,047.2 lb)

24.2.2 Technical data - tires

Tire front	Rear tire
120/70 ZR 19 M/C 60W TL Dunlop Meridian	**170/60 ZR 17 M/C 72W TL** Dunlop Meridian
The tires specified represent one of the possible series production tires. For alternative manufacturers, if any, contact an authorized manufacturer or qualified tire dealership. If local road approval regulations apply, these and the respective technical specifications must be observed.	

24.2.3 Capacities - fuel system

Total fuel tank capacity, approx.	
Super unleaded (ROZ 95) (p. 236)	23 l (6.1 liq. gal_{US})

24.2.3.1 Capacities - fuel system

Fuel reserve, approx.	5 l (1.3 liq. gal_{US})

24.2.4 Fuel

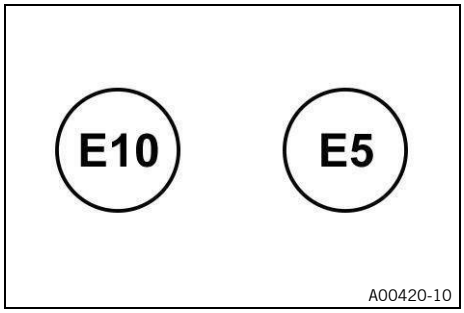

Please observe the labels on EU fuel pumps.

24.3 Electrics

24.3.1 Battery

12 V battery	YTZ14S	Battery voltage: 12 V Nominal capacity: 11.2 Ah Maintenance-free
Button cell	CR 2032	3 V

24.3.2 Fuses

Fuse	58011109110	10 A
Fuse	58011109115	15 A
Fuse	58011109130	30 A

24.3.3 Lamps

Daytime running light/position light	LED
Low beam	LED
high beam	LED
Cornering light	LED
Dashboard illumination and indicator lights	LED
Turn signal	LED
Tail light	LED
Brake light	LED
License plate lighting	LED

24.4 Fork

24.4.1 Technical data - fork

Fork part number	A626C126Y407000

Fork	**WP Suspension Semi–active Suspension**
Spring length with preload spacer(s)	412 mm (16.22 in)
Spring rate	
Medium (standard)	13 N/mm (74.2 lb_f/in)
Left fork length	882 mm (34.72 in)
Right fork length	885 mm (34.84 in)

24.4.2 Capacities - fork

Oil capacity, left outer assembly	
Fork oil (48601166S1) (SAE 4) (p. 237)	650 ml (21.98 fl. oz_{US})
Oil capacity, right outer assembly	
Fork oil (48601166S1) (SAE 4) (p. 237)	697 ml (23.57 fl. oz_{US})

24.5 Shock absorber

24.5.1 Technical data - shock absorber

Shock absorber part number	A626C426Y307000

Shock absorber	**WP Suspension Semi–active Suspension**
Spring rate	
Medium (standard)	150 N/mm … 198.5 N/mm (856.5 lb_f/in … 1,133.45 lb_f/in)
Spring length	203 mm (7.99 in)
Installation position	382 mm (15.04 in)
Preload	
Standard	5.5 mm (0.217 in) **Note** Corresponds to position **0** on the preload adjuster.
Static sag	25 mm (0.98 in)
Riding sag	60 mm (2.36 in)

24.6 Tightening torque

24.6.1 engine tightening torques

Screw, intake air temperature sensor	2 Nm (1.5 ft·lb$_f$)
Hose clip, intake flange M4	1.5 Nm (1.11 ft·lb$_f$)
Screw, gear position sensor M5	5 Nm (3.7 ft·lb$_f$) **Loctite® 243**
Screw, crankshaft position sensor M5	6 Nm (4.4 ft·lb$_f$) **Loctite® 243**
Screw, bearing retainer M5	5 Nm (3.7 ft·lb$_f$) **Loctite® 243**
Remaining screws for engine M5	6 Nm (4.4 ft·lb$_f$)
Screw, engine oil level viewer M5	4 Nm (3.0 ft·lb$_f$) **Loctite® 243**
Screw, oil filter cover M5	6 Nm (4.4 ft·lb$_f$)
Screw, shift shaft sensor M5	5 Nm (3.7 ft·lb$_f$) **Loctite® 243**
Screw, bearing shells retaining bracket M5	6 Nm (4.4 ft·lb$_f$) **Loctite® 243**
Piston jet 70 M5	2 Nm (1.5 ft·lb$_f$) **Loctite® 243**
Position sensor, valve cams M5	6 Nm (4.4 ft·lb$_f$)
Double pin actuator M5	5 Nm (3.7 ft·lb$_f$)
Cam lever shaft, lock screw M5	3 Nm (2.2 ft·lb$_f$)
Screw, swingarm sensor M5×12 – 8.8	5 Nm (3.7 ft·lb$_f$) **Loctite® 243**
Nozzle 100 M6×0.75	3 Nm (2.2 ft·lb$_f$) **Loctite® 243**
Bleed screw, water pump cover M6	10 Nm (7.4 ft·lb$_f$)
Cylinder head bleed screw M6	6 Nm (4.4 ft·lb$_f$)

Nut, cylinder head M6	8 Nm (5.9 ft·lb$_f$)
Screw, oil filler hose M6	10 Nm (7.4 ft·lb$_f$) **Loctite® 243**
Screw, oil/water heat exchanger M6	10 Nm (7.4 ft·lb$_f$) **Loctite® 243**
Detent arm screw M6	10 Nm (7.4 ft·lb$_f$) **Loctite® 243**
Screw, freewheel holder M6	10 Nm (7.4 ft·lb$_f$) **Loctite® 243**
Screw, freewheel ring M6	15 Nm (11.1 ft·lb$_f$)
Stud, timing chain shaft M6	3 Nm (2.2 ft·lb$_f$)
Screw, coolant connection on the cylinder head M6	8 Nm (5.9 ft·lb$_f$) **Loctite® 243**
Screw, clutch cover M6	10 Nm (7.4 ft·lb$_f$)
Screw, clutch pressure plate M6	12 Nm (8.9 ft·lb$_f$)
Screw, engine case M6×60	10 Nm (7.4 ft·lb$_f$)
Screw, engine case M6×80	10 Nm (7.4 ft·lb$_f$)
Screw, engine case M6×90	10 Nm (7.4 ft·lb$_f$)
Screw, camshaft bearing support M6	10 Nm (7.4 ft·lb$_f$)
Screw, oil pump cover M6	10 Nm (7.4 ft·lb$_f$) **Loctite® 243**
Shift star screw M6	18 Nm (13.3 ft·lb$_f$) **Loctite® 243**
Screw, shift lever M6	18 Nm (13.3 ft·lb$_f$)
Screw, secondary air system, cylinder head M6	10 Nm (7.4 ft·lb$_f$)
Screw, starter motor M6	10 Nm (7.4 ft·lb$_f$)
Stator screw M6	10 Nm (7.4 ft·lb$_f$) **Loctite® 243**

Screw, valve cover M6	10 Nm (7.4 ft·lb_f)
Screw, ignition cover M6	10 Nm (7.4 ft·lb_f)
Screw, retaining bracket, valve cover, rear **EJOT PT®** – M6×12	8 Nm (5.9 ft·lb_f)
Screw, water pump cover M6	10 Nm (7.4 ft·lb_f)
Screw, water pump impeller M6	10 Nm (7.4 ft·lb_f) **Loctite® 243**
Remaining screws for engine M6	10 Nm (7.4 ft·lb_f)
Screw, cylinder head slide bars M6	10 Nm (7.4 ft·lb_f) **Loctite® 243**
Screw, tube for oil/water heat exchanger M6	10 Nm (7.4 ft·lb_f) **Loctite® 243**
Screw, ignition coil M6	8 Nm (5.9 ft·lb_f)
Oil nozzle 30, clutch lubrication M6×0.75	2 Nm (1.5 ft·lb_f)
Intake sleeve M6	10 Nm (7.4 ft·lb_f) **Loctite® 243**
Chain shaft screw M6	10 Nm (7.4 ft·lb_f)
Nut, starter cable M6	4 Nm (3.0 ft·lb_f)
Screw, air filter box cover **EJOT DELTA PT®** – M6×20	2 Nm (1.5 ft·lb_f)
Screw, air filter box cover **EJOT DELTA PT®** – M6×30	2.5 Nm (1.84 ft·lb_f)
Screw, camshaft bearing support M7×1	14 Nm (10.3 ft·lb_f)
Stud, exhaust flange M8	10 Nm (7.4 ft·lb_f)
Screw, guide rail M8	15 Nm (11.1 ft·lb_f) **Loctite® 243**
Crankshaft fixing screw M8	12 Nm (8.9 ft·lb_f)
Screw, engine case M8 – Dehnschraube	18 Nm (13.3 ft·lb_f)
Slide rail screw M8	15 Nm (11.1 ft·lb_f) **Loctite® 243**

Nut, manifold on cylinder head M8		25 Nm (18.4 ft·lb$_f$)
Screw plug, spreading transmission lock M10×1		12 Nm (8.9 ft·lb$_f$)
Screw, engine brace M10		45 Nm (33.2 ft·lb$_f$)
Oil pressure sensor M10×1		15 Nm (11.1 ft·lb$_f$)
Screw, release for timing chain tensioner M10×1		8 Nm (5.9 ft·lb$_f$)
Screw plug, clutch lubrication M10×1		8 Nm (5.9 ft·lb$_f$)
Screw, conrod bearing M10×1	1.	10 Nm (7.4 ft·lb$_f$)
	2.	15 Nm (11.1 ft·lb$_f$)
	3.	90° (1.57 rad)
Screw plug, cam lever shaft M10×1		12 Nm (8.9 ft·lb$_f$)
Coolant temperature sensor M10×1.25		12 Nm (8.9 ft·lb$_f$)
Spark plug outside M10×1		11 Nm (8.1 ft·lb$_f$)
Screw, cylinder head M11×1.5 Screw support greased/thread oiled	1.	15 Nm (11.1 ft·lb$_f$)
	2.	30 Nm (22.1 ft·lb$_f$)
	3.	90° (1.57 rad)
	4.	90° (1.57 rad)
Screw, rotor M12×1.5		115 Nm (84.8 ft·lb$_f$)
Spark plug inside M12×1.25		18 Nm (13.3 ft·lb$_f$)
Screw, shock absorber bell crank M12		80 Nm (59.0 ft·lb$_f$)
Oil drain plug M20×1.5		20 Nm (14.8 ft·lb$_f$)
Nut, engine sprocket M20×1.5		100 Nm (73.8 ft·lb$_f$) **Loctite® 243**
Nut, inner clutch hub M22×1.5		150 Nm (110.6 ft·lb$_f$)
Screw plug, alternator cover M24×1.5		8 Nm (5.9 ft·lb$_f$)

Screw plug, timing chain tensioner M24×1.5	25 Nm (18.4 ft·lb$_f$)
Nut, primary gear wheel M33LH×1.5	130 Nm (95.9 ft·lb$_f$) **Loctite® 243**

24.6.2 Chassis tightening torques

Sleeve nut, fuel level sensor	15 Nm (11.1 ft·lb$_f$)
Radiator hose clamp	2.4 Nm (1.77 ft·lb$_f$)
Rear brake reservoir cover	3.5 Nm (2.58 ft·lb$_f$)
Front brake reservoir cover	1 Nm (0.7 ft·lb$_f$)
Screw, fixed grip, left M4×12	3 Nm (2.2 ft·lb$_f$)
License plate lighting screw M4	0.5 Nm (0.37 ft·lb$_f$)
Remaining screws on chassis M4	3 Nm (2.2 ft·lb$_f$)
Remaining nuts on chassis M4	3 Nm (2.2 ft·lb$_f$)
Remaining screws on chassis M5	5 Nm (3.7 ft·lb$_f$)
Screw, brake pedal stub M5×16	10 Nm (7.4 ft·lb$_f$) **Loctite® 243**
Screw, throttle twist grip M5×25	3.5 Nm (2.58 ft·lb$_f$)
Screw, chain slider guard M5×10	5 Nm (3.7 ft·lb$_f$)
Screw, fuel tank cap M5×25	3.5 Nm (2.58 ft·lb$_f$) **Loctite® 243**
Screw, heat shield on silencer M5×14	5 Nm (3.7 ft·lb$_f$)
Screw, brake hose bracket M5×16	2 Nm (1.5 ft·lb$_f$)
Screw, combination switch, left M5	5 Nm (3.7 ft·lb$_f$)
Screw, combination switch, right M5	5 Nm (3.7 ft·lb$_f$)
Remaining nuts on chassis M5	5 Nm (3.7 ft·lb$_f$)
Screw, sliding seat bushing, windshield M5×20	4 Nm (3.0 ft·lb$_f$)

Tire pressure sensor M5×15	2.4 Nm (1.77 ft·lb$_f$)
Screw, brake line guide / cable bracket on swingarm M5×10	5 Nm (3.7 ft·lb$_f$)
Screw, headlight adjuster on mask support M5×14	3.5 Nm (2.58 ft·lb$_f$)
Screw, radiator connection bracket on radiator M5×10	2.8 Nm (2.07 ft·lb$_f$)
Coolant compensating tank screw M5×12	3.5 Nm (2.58 ft·lb$_f$)
Screw, radiator cover M5×12	2.5 Nm (1.84 ft·lb$_f$)
Trim part screw M5	3.5 Nm (2.58 ft·lb$_f$)
Screw, brake reservoir, rear brake M5	3.5 Nm (2.58 ft·lb$_f$) **Loctite® 243**
Screw, Connectivity Unit bracket on frame M5×10	3.5 Nm (2.58 ft·lb$_f$)
Screw, turn signal M5×14	3 Nm (2.2 ft·lb$_f$)
Screw, ACC sensor on carrier M5×12	3 Nm (2.2 ft·lb$_f$) **Loctite® 243**
Remaining screws on chassis M5×12	3.5 Nm (2.58 ft·lb$_f$)
Remaining screws on chassis M5×14	3.5 Nm (2.58 ft·lb$_f$)
Screw, cornering light M5×50	5 Nm (3.7 ft·lb$_f$)
Screw, ABS modulator fastening M6×16	8 Nm (5.9 ft·lb$_f$)
Remaining nuts on chassis M6	10 Nm (7.4 ft·lb$_f$)
Remaining screws on chassis M6	10 Nm (7.4 ft·lb$_f$)
Clamp, header/silencer M6	10 Nm (7.4 ft·lb$_f$)
Screw, rear brake disc M6×19	14 Nm (10.3 ft·lb$_f$) **Loctite® 243**
Screw, front brake disc M6×19	14 Nm (10.3 ft·lb$_f$) **Loctite® 243**
Screw, rear foot brake cylinder M6×25	10 Nm (7.4 ft·lb$_f$) **Loctite® 243**

Screw, fuel cock M6×12	6 Nm (4.4 ft·lb_f)
Screw, fuel pump M6×16	6 Nm (4.4 ft·lb_f)
Screw, rear wheel speed sensor M6×16	8 Nm (5.9 ft·lb_f)
Screw, side stand magnet M6	2 Nm (1.5 ft·lb_f) **Loctite® 243**
Screw, front wheel speed sensor M6×16	8 Nm (5.9 ft·lb_f)
Ground fitting on frame M6×16	6 Nm (4.4 ft·lb_f)
Screw, battery terminal M6×12	4.5 Nm (3.32 ft·lb_f)
Screw, 6-D sensor retaining bracket on frame M6×15	10 Nm (7.4 ft·lb_f) **Loctite® 243**
Screw, voltage regulator M6×25	6 Nm (4.4 ft·lb_f)
Screw, headlight on mask support M6×20	10 Nm (7.4 ft·lb_f)
Screw, 6-D sensor on retaining bracket M6×15	6 Nm (4.4 ft·lb_f) **Loctite® 243**
Screw, front sprocket cover M6×25	9 Nm (6.6 ft·lb_f)
Nut, windshield holder on sliding seat shaft M6	5 Nm (3.7 ft·lb_f)
Screw, combination instrument support M6×18	10 Nm (7.4 ft·lb_f) **Loctite® 243**
Screw, preload adjuster clamp M6×14	6 Nm (4.4 ft·lb_f)
Screw, storage compartment M6×14	6 Nm (4.4 ft·lb_f)
Screw, starter relay cable M6×12	6 Nm (4.4 ft·lb_f)
Screw, rear cover M6×16	6 Nm (4.4 ft·lb_f)
Screw, triple clamp cover M6×16	6 Nm (4.4 ft·lb_f)
Screw, front tank protector M6×22	6 Nm (4.4 ft·lb_f)
Screw, brake cylinder on brake lever M6×20	10 Nm (7.4 ft·lb_f) **Loctite® 243**

Trim part screw M6	6 Nm (4.4 ft·lb$_f$)
Screw, engine guard M6	10 Nm (7.4 ft·lb$_f$)
Screw, pivot joint support M6×25	25 Nm (18.4 ft·lb$_f$) **Loctite® 243**
Nut, shock absorber sensor magnet M6	5 Nm (3.7 ft·lb$_f$)
Screw, tank on fuel tank support M6×15	6 Nm (4.4 ft·lb$_f$)
Screw, seat holder on fuel tank support M6×20	6 Nm (4.4 ft·lb$_f$)
Screw, combination instrument M6×22	8 Nm (5.9 ft·lb$_f$) **Loctite® 243**
Screw, shift lever M6×20	18 Nm (13.3 ft·lb$_f$) **Loctite® 243**
Screw, shift lever on frame M6×16	10 Nm (7.4 ft·lb$_f$) **Loctite® 243**
Remaining screws on chassis M6×14	5 Nm (3.7 ft·lb$_f$)
Screw, brake assembly on handlebar M6	5 Nm (3.7 ft·lb$_f$)
Screw, ACC retaining bracket on plastic carrier M6×20	6 Nm (4.4 ft·lb$_f$) **Loctite® 243**
Remaining nuts on chassis M8	25 Nm (18.4 ft·lb$_f$)
Remaining screws on chassis M8	25 Nm (18.4 ft·lb$_f$)
Screw, front footrest bracket M8×25	25 Nm (18.4 ft·lb$_f$) **Loctite® 243**
Screw, passenger footrest bracket M8×25	25 Nm (18.4 ft·lb$_f$) **Loctite® 243**
Screw, top triple clamp M8×35	20 Nm (14.8 ft·lb$_f$)
Screw, bottom triple clamp M8×35	15 Nm (11.1 ft·lb$_f$)
Screw, fork shoe M8×20	15 Nm (11.1 ft·lb$_f$)
Screw, steering stem clamp M8×35	20 Nm (14.8 ft·lb$_f$)

Handlebar clamp screw M8×25	20 Nm (14.8 ft·lb$_f$)
Screw, side stand bracket on engine M8×25	25 Nm (18.4 ft·lb$_f$) **Loctite® 243**
Screw, ignition lock (tamper-proof screw) M8×25	25 Nm (18.4 ft·lb$_f$) **Loctite® 243**
Screw, steering damper on frame M8×20	25 Nm (18.4 ft·lb$_f$) **Loctite® 243**
Screw, steering damper on triple clamp M8×25	25 Nm (18.4 ft·lb$_f$) **Loctite® 243**
Screw, handle bar end hand guard M8×40	25 Nm (18.4 ft·lb$_f$)
Screw, header clamp, rear M8×25	12 Nm (8.9 ft·lb$_f$)
Screw, topcase rack M8×40	25 Nm (18.4 ft·lb$_f$)
Screw, stand spring bolt M8	15 Nm (11.1 ft·lb$_f$)
Screw, fuel tank rubber support M8×1.25	20 Nm (14.8 ft·lb$_f$)
Valve M8	4 Nm (3.0 ft·lb$_f$)
Screw, crash bar on engine brace M8×20	25 Nm (18.4 ft·lb$_f$) **Loctite® 243**
Screw, crash bar on engine case M8×25	25 Nm (18.4 ft·lb$_f$)
Screw, transverse pipe on frame M8×16	25 Nm (18.4 ft·lb$_f$) **Loctite® 243**
Nut, rear sprocket screw M10×1.25	50 Nm (36.9 ft·lb$_f$) **Loctite® 243**
Screw, foot brake lever M10×30	25 Nm (18.4 ft·lb$_f$) **Loctite® 243**
Remaining nuts on chassis M10	45 Nm (33.2 ft·lb$_f$)
Remaining screws on chassis M10	45 Nm (33.2 ft·lb$_f$)
Screw, front brake caliper M10×1.25×55	45 Nm (33.2 ft·lb$_f$) **Loctite® 243**

Screw, handlebar mount M10×35	40 Nm (29.5 ft·lb$_f$) **Loctite® 243**
Screw, side stand M10	40 Nm (29.5 ft·lb$_f$) **Loctite® 243**
Banjo bolt, brake line M10×1	25 Nm (18.4 ft·lb$_f$)
Screw, side stand bracket on console M10×30	55 Nm (40.6 ft·lb$_f$) **Loctite® 243**
Subframe screw M10×20	45 Nm (33.2 ft·lb$_f$)
Turn signal nut M10×1.25	4 Nm (3.0 ft·lb$_f$)
Screw, engine brace frame M10×50	45 Nm (33.2 ft·lb$_f$) **Loctite® 243**
Screw, top engine mounting M10×20	45 Nm (33.2 ft·lb$_f$) **Loctite® 243**
Screw, bottom engine mounting M10×24	45 Nm (33.2 ft·lb$_f$) **Loctite® 243**
Screw, spacer on engine M10×20	45 Nm (33.2 ft·lb$_f$) **Loctite® 243**
Oxygen sensor M12×1.25	25 Nm (18.4 ft·lb$_f$)
Top shock absorber screw M14×1.5	80 Nm (59.0 ft·lb$_f$) Long-life grease
Bottom shock absorber screw M14×1.5	80 Nm (59.0 ft·lb$_f$) Long-life grease
Screw, shift actuator M14×1.5	15 Nm (11.1 ft·lb$_f$)
Nut, swingarm pivot M19×1.5	130 Nm (95.9 ft·lb$_f$) Long-life grease
Screw, top steering head M20×1.5	18 Nm (13.3 ft·lb$_f$)
Nut, engine sprocket M20×1.5	100 Nm (73.8 ft·lb$_f$) **Loctite® 243**
Nut, wheel spindle, rear M25×1.5	90 Nm (66.4 ft·lb$_f$) Long-life grease

Screw, wheel spindle, front M25×1.5	45 Nm (33.2 ft·lb_f) Long-life grease
Screw, tail light **EJOT PT®** – 40×18	2 Nm (1.5 ft·lb_f)
Remaining Ejot PT screws **EJOT PT®** – K45×12	1 Nm (0.7 ft·lb_f)
Screw, ball-head headlight holder **EJOT PT®** – 50×16	7 Nm (5.2 ft·lb_f)
Screw, oil filler neck on frame **EJOT PT®** – 50×14	2.8 Nm (2.07 ft·lb_f)
Remaining Ejot PT screws **EJOT PT®** – K50×12	1 Nm (0.7 ft·lb_f)
Remaining Ejot PT screws **EJOT PT®** – K50×14	1 Nm (0.7 ft·lb_f)
Remaining Ejot PT screws **EJOT PT®** – K50×16	2 Nm (1.5 ft·lb_f)
Remaining Ejot PT screws **EJOT PT®** – K50×18	2 Nm (1.5 ft·lb_f)

25.1 Declarations of conformity

Note
The functional and equipment scope is model-dependent and may not include all wireless systems and application areas referred to.

25.2 Country-specific declarations of conformity (KTM RACE ON system 1)

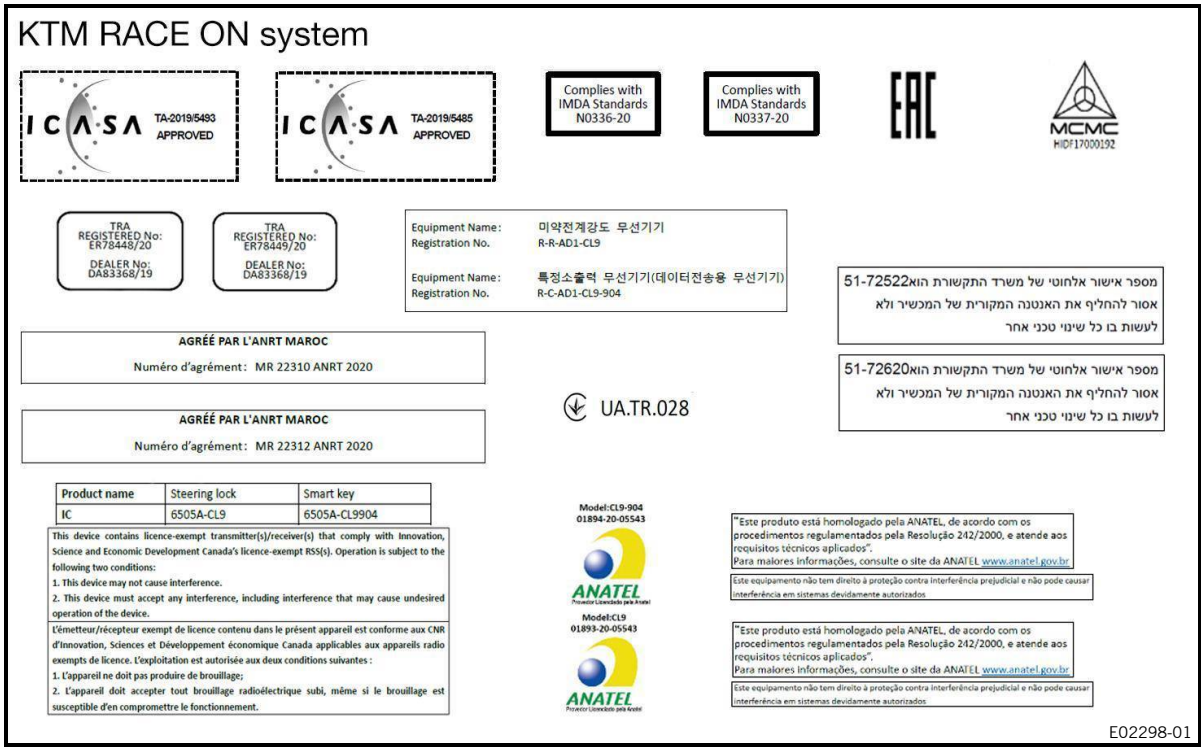

KTM AG hereby declares that the **KTM RACE ON system** wireless system conforms with the relevant guidelines. The full text of the Declaration of Conformity is available at the following Internet address.
Certification website: https://www.ktm.com/ktm-race-on

25.3 Country-specific declarations of conformity (KTM RACE ON system 2)

KTM RACE ON system

La operación de este equipo está sujeta a las siguientes dos condiciones: (1) es posible que este equipo o dispositivo no cause interferencia perjudicial y (2) este equipo o dispositivo debe aceptar cualquier interferencia, incluyendo la que pueda causar su operación no deseada.

Product name	Steering lock	Smart key
Model	CL9	CL9-904
Certification No.	IFETEL: RLVASCL20-0474	IFETEL: RLVASCL20-0473

This product contains radio equipment (134 kHz transmitter) which is conform with the regulations for communications equipment (extremely low-power radio station) specified in article 6, paragraph 1 of the Radio Law Enforcement Regulations.

CNC COMISIÓN NACIONAL DE COMUNICACIONES

H-24465

CNC COMISIÓN NACIONAL DE COMUNICACIONES

H-24464

Product name	Steering lock	Smart key
FCC ID	T8VCL9	T8VCL9-904

This device complies with part 15 of the FCC Rules. Operation is subject to the following two conditions: (1) This device may not cause harmful interference, and (2) this device must accept any interference received, including interference that may cause undesired operation.

FCC CAUTION
Changes or modifications not expressly approved by the party responsible for compliance could void the user's authority to operate the equipment.

TP BY

R-NZ
E6729

不得擅自改变使用场景或使用条件、扩大发射频率范围、加大发射功率（包括额外加装射频功率放大器），不得擅自更改发射天线；
不得对其他合法的无线电台（站）产生有害干扰，也不得提出免受有害干扰保护；
应当承受辐射射频能量的工业、科学及医疗（ISM）应用设备的干扰或其他合法的无线电台（站）干扰；
如对其他合法的无线电台（站）产生有害干扰时，应立即停止使用，并采取措施消除干扰后方可继续使用；
在航空器内和依据法律法规、国家有关规定、标准划设的射电天文台、气象雷达站、卫星地球站（含测控、测距、接收、导航站）等军民用无线电台（站）、机场等的电磁环境保护区域内使用微功率设备，应当遵守电磁环境保护及相关行业主管部门的规定；
禁止在以机场跑道中心点为圆心、半径 5000 米的区域内使用各类模型遥控器；|

低功率電波輻射性電機管理辦法 第十條

第十二條
經型式認證合格之低功率射頻電機，非經許可，公司、商號或使用者均不得擅自變更頻率、加大功率或變更原設計之特性及功能。
第十四條
低功率射頻電機之使用不得影響飛航安全及干擾合法通信；經發現有干擾現象時，應立即停用，並改善至無干擾時方得繼續使用。
前項合法通信，指依電信法規定作業之無線電通信。
低功率射頻電機須忍受合法通信或工業、科學及醫療用電波輻射性電機設備之干擾。

เครื่องโทรคมนาคมและอุปกรณ์นี้ มีความสอดคล้องตามมาตรฐานหรือข้อกำหนดทางเทคนิคของกสทช.

E02326-01

KTM AG hereby declares that the **KTM RACE ON system** wireless system conforms with the relevant guidelines. The full text of the Declaration of Conformity is available at the following Internet address.

Certification website: https://www.ktm.com/ktm-race-on

25.4 Country-specific declarations of conformity (CCU 3)

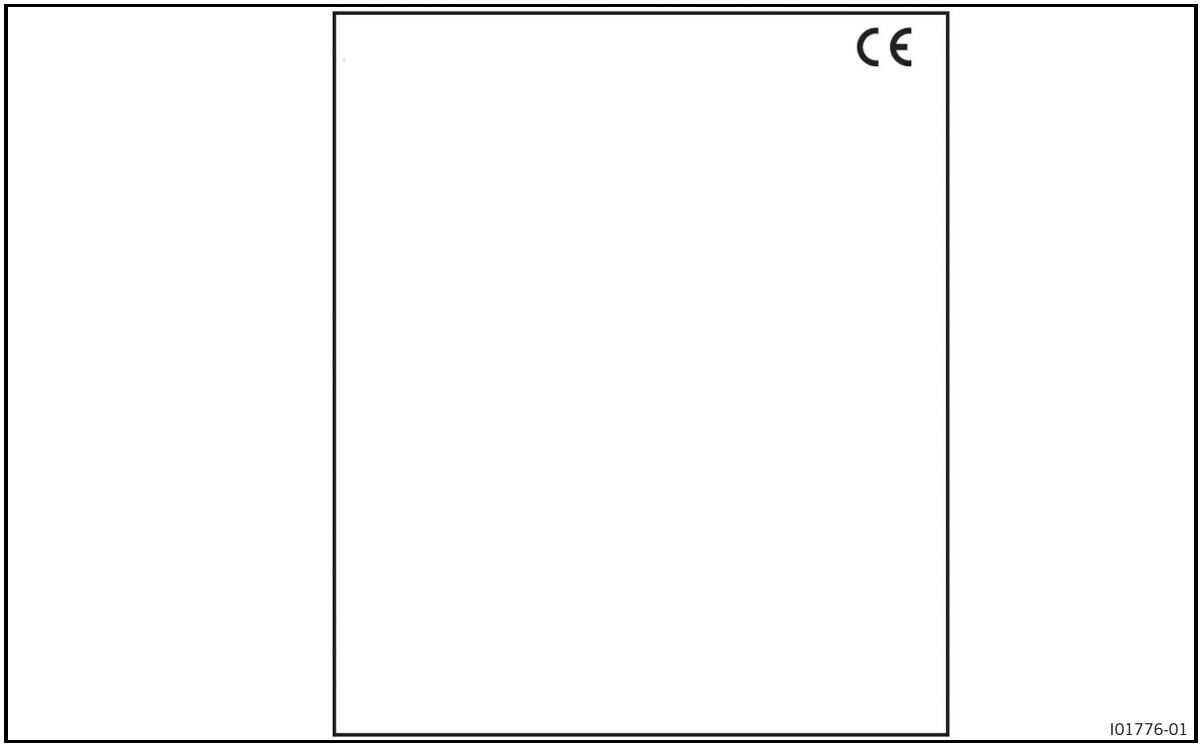

Continental hereby declares that the **Connectivity Control Unit "CCU–3"** wireless system conforms with the relevant guidelines. The full text of the Declaration of Conformity is available at the following Internet address.
Certification website: https://www.ktm.com/ccu3

25.5 Country-specific declarations of conformity (front radar sensor)

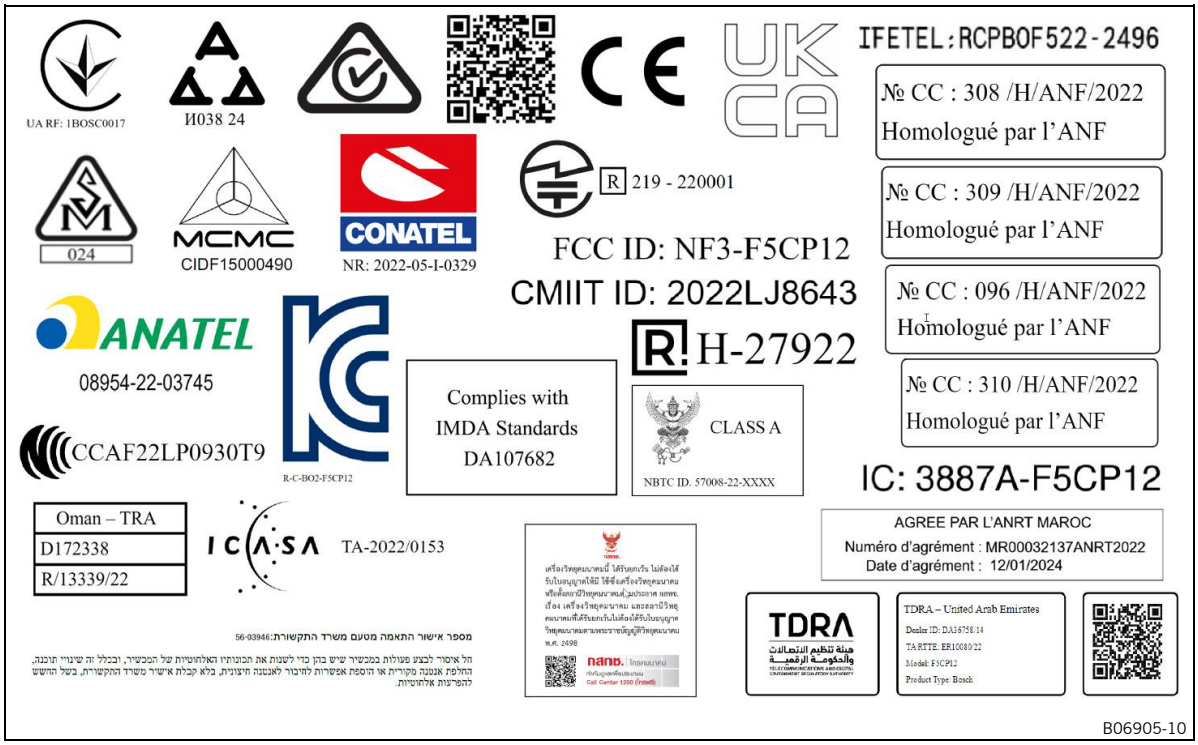

Robert Bosch AG hereby declares that the **Front Radar Sensor** wireless system conforms with the relevant guidelines. The full text of the Declaration of Conformity is available at the following Internet address.
Certification website: http://www.ktm.com/frs-2-0

25.6 Country-specific declarations of conformity (Tire Pressure Monitoring System)

LDL Technology hereby declares that the **Tyre Pressure Monitoring System** wireless system conforms with the relevant guidelines. The full text of the Declaration of Conformity is available at the following Internet address.
Certification website: https://www.ktm.com/tpms

26 Open source

26.1 Information on open source software

Some vehicle components use open source software.

KTM Sportmotorcycle GmbH
Stallhofnerstraße 3
5230 Mattighofen
Austria

The source code of the software used and other information are available online.
overview: https://www.ktm.com/ktm-oss

Note
Due to the file size, the download may time a long time.
Depending on the Internet provider, costs may arise due to the data volume.

A Technical terms

ACC	Adaptive cruise control	Rider assistance system that adjusts the vehicle speed and distance to the vehicles ahead using a radar sensor
ABS	Anti-lock braking system	Safety system that prevents locking of the wheels when riding straight ahead without the influence of lateral forces.
ARA	anti-relay attack	Safety system that deactivates the wireless response of the RACE ON key after a certain time and thus increases security against theft
ATIR	Automatic Turn Indicator Reset	Software, which automatically switches the indicator off according to a time or travel distance counter
CC	Cruise control	Rider assistance system that keeps the vehicle speed at a fixed value
DRL	Daytime Running Light	Light that increases the visibility of the vehicle during the day, but unlike the low beam is not focused and does not illuminate the road ahead.
ETTC	Engine traction torque control	Auxiliary function of the engine control, which prevents rear wheel locking with excessive engine braking effect, by lightly opening the throttle valve
Front radar sensor	Front radar sensor	
HHC	Hill Hold Control	Assist, which prevents the vehicle from rolling backwards on an incline
	KTM RACE ON	System that releases the ignition, steering lock, and fuel tank filler cap via a remote key with a transponder
	KTMconnect	System for remote communication with suitable cell phones and communication systems for telephony and audio
MSC	Motorcycle stability control	This is an auxiliary function for the ABS, which can prevent locking and slipping of the wheels during braking while leaning at an angle, within physical limitations
MTC	Motorcycle Traction Control	Additional engine management function, where the engine torque is reduced in the event of rear wheel slip.
OBD	On-board diagnosis	Vehicle system, which monitors the specified parameters of the vehicle electronics
	QUICKSHIFTER+	Engine electronics function for shifting up and down without clutch actuation

B Fuels

Super unleaded

Standards	
• ROZ 95	→ DIN EN 228

Fuel additive

Recommended supplier
MOTOREX®
• **FUEL STABILIZER**

C Operating supplies

Street chain spray

Recommended supplier

MOTOREX®

- **CHAINLUBE ROAD STRONG**

Fork oil

Order details

- 48601166S1

Standards

- SAE 4 → SAE

Universal oil spray

Recommended supplier

MOTOREX®

- **JOKER 440 SYNTHETIC**

Long-life grease

Recommended supplier

MOTOREX®

- **Bike Grease 2000**

engine oil

Recommended supplier

MOTOREX®

- **POWER SYNT 4T**

Standards

→ JASO T903 MA2

- SAE 10W/50 → SAE

Properties

- fully synthetic

engine oil

Recommended supplier

MOTOREX®

- **POWER SYNT 4T**

Standards	
→ JASO T903 MA2	
• SAE 5W/40	→ SAE
Properties	
• fully synthetic	

Screw support greased/thread oiled

Brake fluid DOT 5.1

Recommended supplier	
MOTOREX® • **BRAKE FLUID DOT 5.1**	
Standards	
→ DOT	

Coolant

Recommended supplier	
MOTOREX® • **COOLANT M3.0**	
Properties	
• Antifreeze protection to at least	−25 °C (−13.0 °F)

D Cleaning agents

Shine spray with beading effect

Recommended supplier

MOTOREX®

- **MOTO SHINE MS1**

Chain cleaner

Recommended supplier

MOTOREX®

- **CHAIN CLEAN**

Preserving materials

Recommended supplier

MOTOREX®

- **MOTO PROTECT**

Cleaning agents for plastics, glass, lacquers, metals, windshields and visors

Recommended supplier

MOTOREX®

- **QUICK CLEANER**

Environmentally neutral universal cleaning agent

Recommended supplier

MOTOREX®

- **MOTO CLEAN UNIVERSAL**

E Icons

E.1 Symbol colors

E.1.1 Red symbols

Red symbols indicate a fault status that requires immediate intervention.

	Collision warning indicator light lights up red.
	The oil pressure warning light lights up red.

E.1.2 Yellow and orange symbols

Yellow and orange symbols indicate a malfunction status that requires prompt intervention. Active driving aids are also represented by yellow or orange symbols.

	Ice warning is active on the display.
	The ABS warning light lights up yellow.
	The ACC cruise control indicator light lights up yellow and vehicle symbol lights up gray.
	KTM RACE ON indicator light lights up/flashes yellow/orange/red.
	The failure indicator light lights up yellow.
	TC indicator light lights up/flashes yellow.
	The cruise control system indicator light lights up yellow.
	The general warning light lights up yellow.
	Collision warning indicator light lights up yellow.
	Overtake Suppression indicator light lights up red.
	Overtake Suppression indicator light lights up yellow.

E.1.3 Green and blue symbols

Green and blue symbols convey information.

	Distance Assist indicator light lights up green.
	The left turn signal indicator light flashes green with a steady rhythm.
	The right turn signal indicator light flashes green with a steady rhythm.

	The ACC cruise control indicator light lights up green and vehicle symbol lights up gray.
	The ACC cruise control indicator light lights up green and the vehicle symbol lights up green.
	The ACC cruise control indicator light lights up green and the **Group Ride** indicator light lights up green.
	The high beam indicator light lights up blue.
	The cruise control system indicator light lights up green.
	Fog light indicator light lights up green.
N	Neutral position indicator is active on the display.

1

12 V battery
- charging . . . 183
- installation . . . 182
- removing . . . 181

A

Accessories . . . 13
Anti Dive (optional) . . . 75
Auxiliary substances . . . 13

B

Brake discs
- checking . . . 165

Brake fluid
- adding front brake . . . 166
- adding to rear brake . . . 168

Brake fluid level
- checking on front brake . . . 165
- checking on rear brake . . . 168

Brake lining retainers
- checking on front brake . . . 167
- checking on rear brake . . . 170

Brake pad
- checking on front brake . . . 167

Brake pads
- checking on rear brake . . . 170

Brake pedal
- adjusting the basic position . . . 131

Brakes . . . 142
Braking . . . 142

Breakdown
- towing . . . 145

C

Chain
- checking . . . 157
- cleaning . . . 154
- dirt, checking for . . . 154

Chain tension
- adjusting . . . 156
- checking . . . 155

Changing gear . . . 139
Clothing . . . 12

Clutch
- checking/correcting fluid level . . . 158

Clutch lever
- adjusting the basic position . . . 129

Coolant level
- checking in the compensating tank . . . 196
- correcting in the compensating tank . . . 196

Customer service . . . 13

D

Dashboard
- **ABS** . . . 64
- Acceleration . . . 122
- Adding network . . . 106
- ambient air temperature indicator . . . 52
- **Anti Dive** (optional) . . . 75
- **Bluetooth** . . . 107
- **Bluetooth & WiFi** . . . 104
- **Bluetooth** settings . . . 107
- Calls . . . 101
- Choose on Map . . . 96
- **Clock format** . . . 118
- **Damping** . . . 71
- **Date format** . . . 119
- demo mode . . . 38
- Display speed control . . . 99
- Distance . . . 120
- Engine Brake Control (Optional) . . . 69
- **Favorites display 1–8** . . . 103
- front rider's seat heating (optional) . . . 124
- heated grip (optional) . . . 123
- **Hill Hold Control** (optional) . . . 76
- Map Style . . . 98
- **MTC** . . . 65
- **MTC+MSR** (optional) . . . 66
- Music . . . 101
- Notifications . . . 99
- Offline maps . . . 98
- overview . . . 37
- Overview of routes . . . 97
- Passenger communication system pairing . . . 110
- Passenger seat heating (optional) . . . 124
- **Phone pairing** . . . 108
- **Preload adjuster** . . . 70, 149
- Pressure . . . 121
- **Pro Options** (optional) . . . 72
- **QUICKSHIFTER+** (optional) . . . 77
- Rider communication system pairing . . . 109
- Search . . . 95
- Settings . . . 97
- slip adjustment (optional) . . . 199
- **Slip Adjuster** (optional) . . . 67
- Stop navigation . . . 96
- **Suspension Mode** . . . 150
- Temperature . . . 120

Threshold value of speed control 100
Throttle Response (optional) 75, 200
time 51
Updates 105
Utilization 121
WiFi 106
WIFI settings 105

Date
adjusting 116, 192

Declarations of conformity
country-specific . . . . . 230...231
country-specific (CCU 3) 232
country-specific (front radar sensor) 233
country-specific (Tire Pressure Monitoring System) 233

Defined use 10

E

Engine
running in 134

Engine oil
adding 205
changing 201

Engine oil level
checking 201

Engine traction torque control 142
Environment 12
ETTC 142

F

Figures 13

Fork
cleaning the dust boots 162

Front fender
installation 161
removing 161

Front sprocket
checking 157

Front wheel
installing 172
removing 171

Fuel tank cap
closing 32
opening 31

Fuses
in fuse box, changing 188

G

Gear shift lever
adjusting the basic position 130
checking the basic position 130

Gear shift lever tip
adjusting 131

H

Handbrake lever
adjusting the basic position 129

Handlebar position
adjusting 128

Headlight
adjusting headlight range 190

Headlight setting
checking 190

I

Implied warranty 13
Improper use 12
Intended use 10

L

Luggage 134

M

Main fuse
changing 187

Manufacturer's warranty 13

Motorcycle
cleaning 207
lifting gear at rear, raising with 151
raising the front with lifting gear 151
removing from the front lifting gear 152
removing the rear from the lifting gear 151

O

Oil filler neck cover
installation 161
removing 161

Oil filter
changing 201

Oil screens
cleaning 201

On-board tool kit 35
Owner's manual 12

P

Parking 143

Passenger seat
mounting 153
removing 152

Preload adjuster 70, 149

Preparing for use
after storage 211
checks and maintenance measures when preparing for use 136
notes on preparing for first use 133
Protective clothing 12

R

RACE ON key
changing RACE ON key battery 186
Rear hub damping rubbers
checking 176
Rear sprocket
checking 157
Rear wheel
installation 175
removing 174
Refueling
fuel 145
Resources 13
Rider seat
adjusting 127
mounting 153
removing 153
Riding 139
Starting off 138
Roadside Assistance 13

S

Safe use 10
Service 13
Side spoiler
installation 160
removing 160
Skid plate
installation 160
removing 160
Spare parts 13
Starting 136
Steering
locking 28
unlocking 28
Stopping 143
Storage 210
Storage compartment
closing 33
opening 33

T

Tampering 11
Time
adjusting 116, 192
Tire condition
checking 177
Tire pressure
checking 178
towing 145
Transportation 144

V

Vehicle
loading 134

W

Windshield
adjusting 129
installation 159
removing 159
Winter operation
checks and maintenance steps 208
Work rules 11

3240282en

28/01/2026

KTM Sportmotorcycle GmbH
5230 Mattighofen/Austria
https://www.ktm.com