OWNER'S MANUAL 2023

SM 700

Art. no. 3215135en

DEAR GASGAS CUSTOMER

Congratulations on your decision to purchase a GASGAS motorcycle. You are now the owner of a state-of-the-art sports vehicle which, with appropriate care, will bring you pleasure for a long time to come. We wish you good and safe riding at all times!

Enter the serial numbers of your vehicle below.

Vehicle identification number (📖 p. 16)	Dealer's stamp
Engine number (📖 p. 17)	
Key number (📖 p. 16)	

The Owner's Manual contained the latest information for this model series at the time of publication. However, minor differences due to further developments in design cannot be ruled out completely.

All specifications contained herein are non-binding. GASGAS Motorcycles GmbH specifically reserves the right to modify or delete technical specifications, prices, colors, forms, materials, services, designs, equipment, etc., without prior notice and without specifying reasons, to adapt these to local conditions, as well as to stop production of a particular model without prior notice. GASGAS Motorcycles accepts no liability for delivery options, deviations from figures and descriptions, as well as misprints and other errors. The models portrayed partly contain special equipment that does not belong to the regular scope of supply.

© 2024 GASGAS GmbH, Mattighofen Austria

All rights reserved
Reproduction, even in part, as well as copying of all kinds, is permitted only with the express written permission of the copyright owner.

ISO 9001(12 100 6061)
GASGAS applies quality assurance processes that lead to the highest possible product quality as defined in the ISO 9001 international quality management standard.
Issued by: TÜV SÜD Management Service GmbH

REG.NO. 12 100 6061

GASGAS GmbH
Stallhofnerstraße 3
5230 Mattighofen, Austria

This document is valid for the following models:

SM 700 US (F0575W3)

3215135en

13.08.2024

TABLE OF CONTENTS

1 MEANS OF REPRESENTATION 5
1.1 Symbols used 5
1.2 Formats used 5
2 SAFETY ADVICE 6
2.1 Use definition – intended use 6
2.2 Misuse 6
2.3 Safety advice 6
2.4 Degrees of risk and symbols 6
2.5 Overview of labels 7
2.6 Reporting safety defects 9
2.7 Noise emission warranty 9
2.8 Operating noise warning 9
2.9 Manufacturer warranty for the exhaust monitoring system 9
2.10 Consumer rights 10
2.11 Tampering warning 10
2.12 Safe operation 10
2.13 Protective clothing 11
2.14 Work rules 11
2.15 Environment 11
2.16 Owner's Manual 12
3 IMPORTANT NOTES 13
3.1 Manufacturer warranty, implied warranty 13
3.2 Fuel, auxiliary substances 13
3.3 Spare parts, technical accessories 13
3.4 Service 13
3.5 Figures 13
3.6 Customer service 13
4 VIEW OF VEHICLE 14
4.1 View of vehicle, front left (example) 14
4.2 View of vehicle, rear right (example) 15
5 SERIAL NUMBERS 16
5.1 Vehicle identification number 16
5.2 Type label 16
5.3 Key number 16
5.4 Engine number 17
5.5 Fork part number 17
5.6 Shock absorber article number 17
6 CONTROLS 18
6.1 Clutch lever 18
6.2 Hand brake lever 18
6.3 Throttle grip 18
6.4 Horn button 18
6.5 Light switch 19
6.6 Turn signal switch 19
6.7 Emergency OFF switch 19
6.8 Start button 19
6.9 Combination switch 20
6.10 Ignition and steering lock 20
6.11 ABS button 21
6.12 Overview of indicator lights 21
6.13 Seat release 22
6.14 Grab handles 22
6.15 Passenger foot pegs 22
6.16 Shift lever 22
6.17 Foot brake lever 23
6.18 Side stand 23
6.19 Opening the fuel tank filler cap 23
6.20 Closing the fuel tank filler cap 24
7 COMBINATION INSTRUMENT 25
7.1 Overview 25
7.2 Activation 25
7.3 Messages on the combination instrument 25
7.4 Setting the combination instrument 25
7.5 Setting kilometers or miles 26
7.6 Setting the clock 27
7.7 Setting the service display 27
7.8 Speed, time, and DST distance 1 28
7.9 Speed, time, and DST2 distance 2 28
7.10 AVG average speed, ART operating hours, and ODO total distance covered 29
8 PREPARING FOR USE 30
8.1 Advice on preparing for first use 30
8.2 Running in the engine 31
8.3 Loading the vehicle 31
9 RIDING INSTRUCTIONS 33
9.1 Checks and maintenance measures when preparing for use 33
9.2 Starting the vehicle 33
9.3 Starting off 34
9.4 Shifting, riding 35
9.5 QUICKSHIFTER+ 37
9.6 Motorcycle traction control 38
9.7 Braking 38
9.8 Stopping, parking 39
9.9 Transport 40
9.10 Towing in the event of a breakdown 40
9.11 Refueling 41
10 SERVICE SCHEDULE 43
10.1 Additional information 43
10.2 Service schedule 43
11 TUNING THE CHASSIS 45
11.1 Fork/shock absorber 45
11.2 Adjusting the compression damping of the fork 45
11.3 Adjusting the rebound damping of the fork 45
11.4 Compression damping of the shock absorber 46
11.5 Adjusting the low-speed compression damping of the shock absorber 46
11.6 Adjusting the high-speed compression damping of the shock absorber 47

11.7 Adjusting the rebound damping of the shock absorber ... 48
11.8 Handlebar position ... 48
11.9 Adjusting the handlebar position ... 48

12 SERVICE WORK ON THE CHASSIS ... 50

12.1 Raising the motorcycle with a lift stand ... 50
12.2 Removing the motorcycle from the lift stand ... 50
12.3 Raising the motorcycle with rear lifting gear ... 50
12.4 Removing the rear of the motorcycle from the wheel stand ... 51
12.5 Lifting the motorcycle with the front lifting gear ... 51
12.6 Taking the motorcycle off the front lifting gear ... 51
12.7 Cleaning the dust boots of the fork legs ... 52
12.8 Removing fork protector ... 52
12.9 Installing the fork protector ... 53
12.10 Removing the seat ... 53
12.11 Mounting the seat ... 53
12.12 Removing the tool set ... 53
12.13 Storing the tool set ... 54
12.14 Take off the side cover ... 55
12.15 Mounting side cover ... 56
12.16 Removing the front fender ... 57
12.17 Installing the front fender ... 57
12.18 Removing the air filter ... 57
12.19 Installing the air filter ... 58
12.20 Checking the chain for dirt ... 58
12.21 Cleaning the chain ... 59
12.22 Checking the chain tension ... 59
12.23 Adjusting the chain tension ... 60
12.24 Checking the chain, rear sprocket, engine sprocket, and chain guide ... 61
12.25 Adjusting chain guide ... 64
12.26 Checking the rubber grip ... 64
12.27 Adjusting the basic position of the clutch lever ... 65
12.28 Checking/correcting the fluid level of hydraulic clutch ... 65

13 BRAKE SYSTEM ... 67

13.1 Anti-lock braking system (ABS) ... 67
13.2 Adjusting the basic position of the hand brake lever ... 68
13.3 Checking the brake discs ... 68
13.4 Checking the front brake fluid level ... 69
13.5 Adding front brake fluid ... 69
13.6 Checking that the brake linings of the front brake are secured ... 70
13.7 Checking the free travel of foot brake lever ... 71
13.8 Adjusting the basic position of the foot brake lever ... 71
13.9 Checking the rear brake fluid level ... 72
13.10 Adding rear brake fluid ... 73
13.11 Checking that the brake linings of the rear brake are secured ... 74

14 WHEELS, TIRES ... 75

14.1 Removing the front wheel ... 75
14.2 Installing the front wheel ... 75
14.3 Removing the rear wheel ... 77
14.4 Installing the rear wheel ... 78
14.5 Checking the rear hub damping rubber pieces ... 79
14.6 Checking the tire condition ... 80
14.7 Checking tire pressure ... 81
14.8 Using tire repair spray ... 81

15 ELECTRICAL SYSTEM ... 82

15.1 Removing the 12-V battery ... 82
15.2 Installing the 12-V battery ... 83
15.3 Charging the 12-V battery ... 84
15.4 Changing the main fuse ... 85
15.5 Changing the ABS fuses ... 86
15.6 Changing the fuses of individual electrical power consumers ... 87
15.7 Removing the headlight mask with the headlight ... 88
15.8 Installing the headlight mask with the headlight ... 88
15.9 Changing the headlight bulb ... 89
15.10 Changing the position light lamp ... 90
15.11 Changing the turn signal bulb ... 90
15.12 Checking the headlight setting ... 91
15.13 Adjusting the headlight range ... 92
15.14 Changing the combination instrument battery ... 92
15.15 ACC1 and ACC2 ... 93
15.16 Diagnostics connector ... 93

16 COOLING SYSTEM ... 94

16.1 Cooling system ... 94
16.2 Checking the antifreeze and coolant level ... 94
16.3 Checking the coolant level ... 95
16.4 Draining the coolant ... 96
16.5 Filling/bleeding the cooling system ... 97
16.6 Changing the coolant ... 98

17 TUNING THE ENGINE ... 100

17.1 Changing the riding mode ... 100
17.2 Adjusting traction control ... 100
17.3 Checking the basic position of the shift lever ... 101
17.4 Adjusting the basic position of the shift lever ... 101

18 SERVICE WORK ON THE ENGINE ... 102

18.1 Checking the engine oil level ... 102
18.2 Changing the engine oil and oil filter, cleaning the oil screens ... 102
18.3 Adding engine oil ... 105

TABLE OF CONTENTS

19 CLEANING, CARE 106

19.1 Cleaning the motorcycle 106
19.2 Checks and maintenance steps for winter operation 107

20 STORAGE 108

20.1 Storage 108
20.2 Preparing for use after storage 109

21 TROUBLESHOOTING 110

22 TECHNICAL SPECIFICATIONS 112

22.1 Engine 112
22.2 Engine tightening torques 113
22.3 Capacities 115
22.3.1 Engine oil 115
22.3.2 Coolant 115
22.3.3 Fuel 116
22.4 Chassis 116
22.5 Electrical system 117
22.6 Tires 117
22.7 Fork 117
22.8 Shock absorber 118
22.9 Chassis tightening torques 118

23 SUBSTANCES 122

24 AUXILIARY SUBSTANCES 124

25 STANDARDS 125

26 INDEX OF SPECIAL TERMS 126

27 LIST OF ABBREVIATIONS 127

28 LIST OF SYMBOLS 128

28.1 Red symbols 128
28.2 Yellow and orange symbols 128
28.3 Green and blue symbols 128

INDEX 129

1.1 Symbols used

The meaning of specific symbols is described below.

✓	Indicates an expected reaction (e.g., of a work step or a function).
✗	Indicates an unexpected reaction (e.g., of a work step or a function).
🔧	Indicates work that requires expert knowledge and technical understanding. In the interest of your own safety, have this work performed by an authorized GASGAS Motorcycles workshop. Your motorcycle will be cared for there to the highest degree by specially trained experts using the special tools required.
📖	Indicates a page reference (more information is provided on the specified page).
ℹ	Indicates information with more details or tips.
»	Indicates the result of a testing step.
◀	Indicates the end of an activity, including potential reworking.

1.2 Formats used

The typographical formats used in this document are explained below.

Proprietary name	Indicates a proprietary name.
Name®	Indicates a protected name.
Brand™	Indicates a brand available on the open market.
Underlined terms	Refer to technical details of the vehicle or indicate technical terms, which are explained in the glossary.

2 SAFETY ADVICE

2.1 Use definition – intended use

The vehicle is designed and constructed to withstand the usual demands of regular traffic and use on gentle terrain (unpaved roads).
This vehicle is not suitable for use on race tracks.

Info
This vehicle is only authorized for operation on public roads in its homologated version.

2.2 Misuse

The vehicle must only be used as intended.
Dangers can arise for people, property and the environment through use not as intended.
Any use of the vehicle beyond the intended and defined use constitutes misuse.
Misuse also includes the use of operating and auxiliary fluids which do not meet the required specification for the respective use.

2.3 Safety advice

A number of safety instructions need to be followed to operate the product described safely. Therefore read this instruction and all further instructions included carefully. The safety instructions are highlighted in the text and are referred to at the relevant passages.

Info
Various information and warning labels are attached in prominent locations on the product described. Do not remove any information or warning labels. If they are missing, you or others may not recognize dangers and may therefore be injured.

2.4 Degrees of risk and symbols

Danger
Identifies a danger that will immediately and invariably lead to fatal or serious permanent injury if the appropriate measures are not taken.

Warning
Identifies a danger that is likely to lead to fatal or serious injury if the appropriate measures are not taken.

Caution
Identifies a danger that may lead to minor injuries if the appropriate measures are not taken.

Note
Identifies a danger that will lead to considerable machine and material damage if the appropriate measures are not taken.

Note
Indicates a danger that will lead to environmental damage if the appropriate measures are not taken.

2.5 Overview of labels

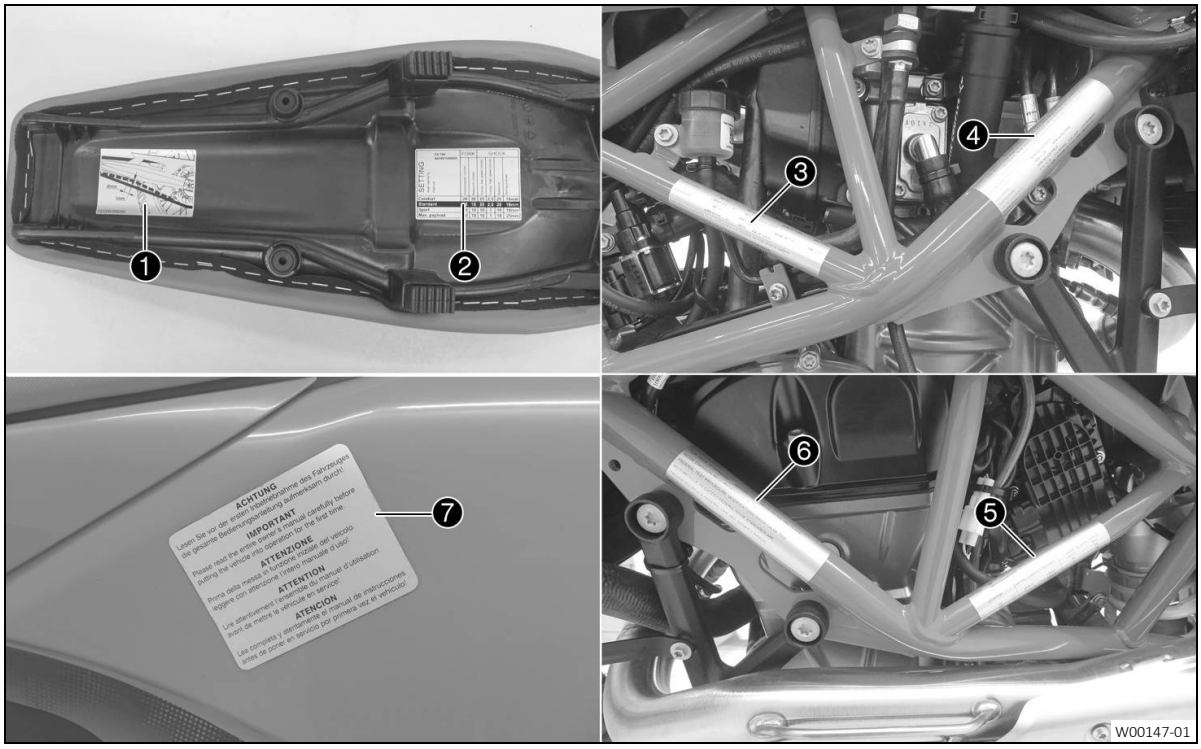

1	Information, chain tension
2	Information, suspension setting
3	Information, noise emission
4	Type label, USA
5	Type label, Canada
6	Information, emission control
7	Information, putting into operation

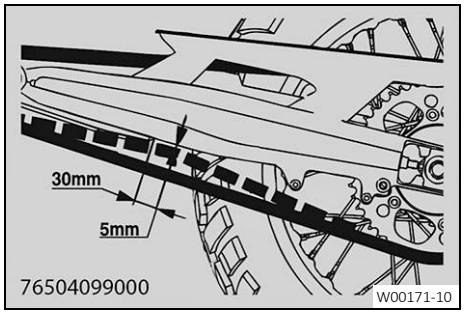

Information, chain tension

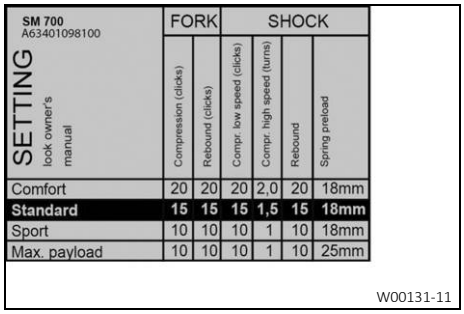

SM 700
A6340098100

SETTING look owner's manual

	FORK		SHOCK			
	Compression (clicks)	Rebound (clicks)	Compr. low speed (clicks)	Compr. high speed (turns)	Rebound	Spring preload
Comfort	20	20	20	2,0	20	18mm
Standard	**15**	**15**	**15**	**1,5**	**15**	**18mm**
Sport	10	10	10	1	10	18mm
Max. payload	10	10	10	1	10	25mm

W00131-11

Information, suspension setting

MOTORCYCLE NOISE EMISSION CONTROL INFORMATION
KTM AG, AUSTRIA

THIS 2023 KTM7680693 MOTORCYCLE, 769.05.082.000 MEETS EPA NOISE EMISSION REQUIREMENTS OF 80 dBA AT 4400 RPM BY THE FEDERAL TEST PROCEDURE. MODIFICATIONS WHICH CAUSE THIS MOTORCYCLE TO EXCEED FEDERAL NOISE STANDARDS ARE PROHIBITED BY U.S. FEDERAL LAW. SEE OWNER´S MANUAL.

Motorcycle Type : SM 700

W00138-11

Information, noise emission

GASGAS MFD. BY KTM AG AUSTRIA
MOTORCYCLE DATE **09/22**

GVWR	**771** lbs		**350** kg				
GAWR FRONT	**331** lbs		**150** kg	WITH	**120/70ZR17**	TIRE,	**58W** TYPE,
	3.50x17 RIM,	AT	**29** psi	**2.0** bar COLD			
GAWR REAR	**441** lbs		**200** kg	WITH	**160/60ZR17**	TIRE,	**69W** TYPE,
	5.00x17 RIM,	AT	**32** psi	**2.2** bar COLD			

THIS VEHICLE CONFORMS TO ALL APPLICABLE U.S. FEDERAL MOTOR VEHICLE SAFETY STANDARDS IN EFFECT ON THE DATE OF MANUFACTURER SHOWN ABOVE.

DUMMY*

W00139-11

Type label, USA

MANUFACTURED BY/FABRIQUÈ PAR: **KTM AG**
GVPR/PNBV: **350** KG DATE: **09/22**
V.I.N./N.I.V.: **DUMMY***
TYPE: **MC**

GAWR/PNBE			TIRE/PNEU-DIMENSION-RIM/JANTE		COLD INFL. PRESS PRESS. DE GONFL. À FROID PSI/LPC	KPA
1st	**150**	KG	**120/70ZR17**	**3.50x17**	**29**	**200**
2nd	**200**	KG	**160/60ZR17**	**5.00x17**	**32**	**220**

THIS VEHICLE CONFORMS TO ALL APPLICABLE STANDARDS PRESCRIBED UNDER THE CANADIAN MOTOR VEHICLE SAFETY REGULATIONS IN EFFECT ON THE DATE OF MANUFACTURE - CE VÉHICULE EST CONFORME Á TOUTES LES NORMES QUI LUI SONT APPLICABLES ES VERTU DU RÉGLEMENT SUR LA SÉCURITÉ DES VÉHICLES AUTOMOBILES DU CANADA EN VIGUEUR Á LA DATE DE SA FABRICATION

W00140-11

Type label, Canada

VEHICLE EMISSION CONTROL INFORMATION

GASGAS **MANUFACTURER: KTM AG, Mattighofen, Austria**
IMPORTER: KTM NORTH AMERICA, INC.

ENGINE DISPLACEMENT **693 cc**
ENGINE FAMILY **PKTXC0.69ESM**
EVAPORATIVE FAMILY **PKTXU0014ESM**
PERMEATION FAMILY **PKTXPP104R27**
ENGINE EXHAUST EMISSION CONTROL SYSTEM: **TWC, TBI, PAIR, HO2S**
MODEL NAME **SM 700**

THIS VEHICLE CONFORMS WITH US EPA AND CALIFORNIA REGULATIONS APPLICABLE TO 2023 MODEL YEAR NEW MOTORCYCLES AND IS CERTIFIED TO 0.8 G/KM HC+NOX, 12 G/KM CO EXHAUST EMISSON STANDARDS IN CALIFORNIA.

ENGINE TUNEUP SPECIFICATIONS:

IGNITION TIMING:	**NON ADJUSTABLE**
IDLE SPEED:	**1600 +/- 50 RPM IN NEUTRAL**
IDLE MIXTURE:	**NON ADJUSTABLE**
VALVE CLEARANCE:	**0.10 - 0.15 mm INTAKE 0.22 - 0.27 mm EXHAUST**
SPARK PLUG:	**(central) NGK LKAR9BI-10, (outer) NGK LMAR7DI-10**
SPARK PLUG GAP:	**1.0 mm**
FUEL:	**UNLEADED GASOLINE ONLY - 91 (R+M)/2 OCTANE OR HIGHER**
OIL:	**SAE 10 W 50**

W00141-11

Information, emission control

Information, putting into operation

2.6 Reporting safety defects

If you believe that your vehicle has a defect which could cause an accident resulting in injury or death, you must immediately inform the National Highway Traffic Safety Administration (NHTSA) in addition to notifying GASGAS North America.
If the NHTSA receives multiple similar complaints, it may open an investigation. and if it finds that a safety defect exists in a group of vehicles, it may order a recall and remedy campaign. However, NHTSA cannot become involved in individual problems between you, your dealer, or GASGAS North America.
You can contact the NHTSA via the toll-free "Auto Safety Hotline" on 1–888–327–4236, visit the www.nhtsa.dot.gov website, or write to: NHTSA Headquarters, 1200 New Jersey Avenue, SE, West Building, Washington, DC 20590, USA. You can also obtain other information about motor vehicle safety from the hotline.

2.7 Noise emission warranty

GASGAS North America guarantees that this exhaust system meets all applicable U.S. EPA Federal noise standards at the time of sale.
This manufacturer's warranty extends to the first person who purchases this exhaust system for purposes other than resale, and to all subsequent buyers.
Warranty claims should be directed to:
GASGAS North America, c/o KTM North America, Inc., Customer Support, 1119 Milan Ave., Amherst, OH 44001, USA
Phone: (440) 985–3553
www.gasgas.com
GASGAS North America, c/o KTM Canada, Inc., 8701 Rue Samuel-Hatt, Chambly, QC J3L 6V4, Canada
Phone: (450) 441–4451
www.gasgas.com

2.8 Operating noise warning

This product should be checked for necessary repair or replacement parts if the motorcycle noise has increased significantly through use. Otherwise, the owner may become subject to penalties under the applicable ordinances.

2.9 Manufacturer warranty for the exhaust monitoring system

GASGAS North America guarantees that, at the time of sale, the exhaust monitoring system complies with all the standards of the US Environmental Protection Agency (EPA) and the California Air Resources Board (CARB).
This manufacturer warranty applies in respect of the first owner of the motorcycle and all subsequent owners.
Your exhaust monitoring system may include parts, such as the fuel injection system, ignition, catalytic converter, control units, hoses, connectors and other emission related assemblies, fuel tank, crankcase breather, fuel tank lid for vehicles with fuel evaporation monitoring, oil filler cap, pressure control valve, fuel/vapor separator, canister, ignition coils, ignition wire, capacitors and spark plugs, if a fault occurs before the first scheduled replacement; it may also include the hoses, fittings, and pipes that are used directly in these components.
If the warranty conditions are met, GASGAS Motorcycles will repair your motorcycle for you free of charge, including diagnosis, parts and labor.
As the owner of the motorcycle, you are responsible for the required maintenance specified in the Owner's Manual.
Please note that GASGAS Motorcycles is entitled to reject warranty claims if your motorcycle or a part fails due to misuse, negligence, an accident, participation in racing or similar events, improper service work, or unauthorized modifications.

Scope of the manufacturer's warranty

– Five (5) years or 30,000 kilometers (18,641 miles), whichever occurs first.

If you have any questions regarding the manufacturer warranty for the exhaust monitoring system, please address these to:
GASGAS North America, c/o KTM North America, Inc., Customer Support, 1119 Milan Ave., Amherst, OH 44001, USA
Phone: (888) 985-6090
U.S. Environmental Protection Agency, 2000 Traverwood Drive, Ann Arbor, MI 48105, USA
California Air Resources Board, 1001 "I" Street, Sacramento, CA 95814, USA

2.10 Consumer rights

Warranty claims should be submitted to a GASGAS Motorcycles workshop. If you are not satisfied, please contact:
GASGAS North America, c/o KTM North America, Inc., Customer Support, 1119 Milan Ave., Amherst, OH 44001, USA
Phone: (440) 985–3553
www.gasgas.com
GASGAS North America, c/o KTM Canada, Inc., 8701 Rue Samuel-Hatt, Chambly, QC J3L 6V4, Canada
Phone: (450) 441–4451
www.gasgas.com
Different rights may apply, according to national or regional legislation.

2.11 Tampering warning

Tampering with the noise control system is prohibited. Federal law prohibits the following acts or the causing thereof:

1. The removal or rendering inoperative by any person other than for purposes of servicing, repair, or replacement, of any device or element of design incorporated into any new vehicle for the purpose of noise control prior to its sale or delivery to the ultimate purchaser or while it is in use, or
2. the use of the vehicle after such device or element of design has been removed or rendered inoperative by any person.

Among those acts presumed to constitute tampering are the acts listed below:

1. Removal or puncturing of the main silencers, baffles, header pipes or any other components which conduct exhaust gases.
2. Removal or puncturing of parts of the intake system.
3. Lack of proper maintenance.
4. Replacing moving parts of the vehicle, or parts of the exhaust system or intake system, with parts other than those specified by the manufacturer.

2.12 Safe operation

Danger

Danger of accidents A rider who is not fit to ride poses a danger to him or herself and others.

– Do not operate the vehicle if you are not fit to ride due to alcohol, drugs or medication.
– Do not operate the vehicle if you are physically or mentally impaired.

Danger

Danger of poisoning Exhaust gases are toxic and inhaling them may result in unconsciousness and death.

– Always make sure there is sufficient ventilation when running the engine.
– Use effective exhaust extraction when starting or running the engine in an enclosed space.

Warning

Danger of burns Some vehicle components become hot when the vehicle is operated.

– Do not touch any parts such as the exhaust system, radiator, engine, damper, or brake system before the vehicle parts have cooled down.
– Let the vehicle parts cool down before you perform any work on the vehicle.

Only operate the vehicle when it is in perfect technical condition, in accordance with its intended use, and in a safe and environmentally compatible manner.
An appropriate driver's license is needed to drive the vehicle on public roads.
Have malfunctions that impair safety immediately eliminated by an authorized GASGAS Motorcycles workshop.
Adhere to the information and warning labels on the vehicle.

2.13 Protective clothing

Warning

Risk of injury Missing or poor protective clothing presents an increased safety risk.

- Wear appropriate protective clothing such as helmet, boots, gloves as well as trousers and a jacket with protectors on all rides.
- Always wear protective clothing that is in good condition and meets the legal regulations.

In the interest of your own safety, GASGAS Motorcycles recommends that you only operate the vehicle while wearing protective clothing.

2.14 Work rules

Unless specified otherwise, the ignition must be turned off during all work (models with ignition lock, models with transponder key) or the motor must be at a standstill (models without ignition lock or transponder key).
Special tools are necessary for certain tasks. If these special tools are not included in the scope of supply of the vehicle, the special tools can be ordered using the specified article number. Example: bearing puller (15112017000)
Unless otherwise noted, normal conditions apply to all tasks and descriptions.

Ambient temperature	20 °C (68 °F)
Ambient air pressure	1,013 mbar (14.69 psi)
Relative air humidity	60 ± 5 %

During assembly, use new parts to replace parts which cannot be reused (e.g. self-locking screws and nuts, expansion screws, seals, sealing rings, O-rings, pins, and lock washers).
In the case of certain screw connections, a thread locker (e.g., **Loctite®**) is required. Observe the manufacturer's instructions.
If a thread locker (e.g. **Precote®**) has already been applied to a new part, do not apply any additional thread locker.
After disassembly, clean the parts that are to be reused and check them for damage and wear. Change damaged or worn parts.
Ensure that the work area is clean and clean components before disassembly if necessary. Penetrating dirt can lead to increased wear and consequential damage.
After completing a repair or service work, check the operating safety of the vehicle.

2.15 Environment

If you use your motorcycle responsibly, you can ensure that problems and conflicts do not occur. To protect the future of the motorcycle sport, make sure that you use your motorcycle legally, be environmentally aware, and respect the rights of others.
When disposing of used oil, other operating and auxiliary fluids, and used components, comply with the laws and guidelines of the country in which you are disposing of them.
Because motorcycles are not subject to the EU regulations governing the disposal of used vehicles, there are no legal regulations that pertain to the disposal of an end-of-life motorcycle. Your authorized GASGAS Motorcycles dealer will be glad to advise you.

2.16 Owner's Manual

Read this owner's manual carefully and completely before making your first trip. The Owner's Manual contains useful information and many tips on how to operate, handle, and service your motorcycle. This is the only way to find out how best to customize the vehicle for your own use and how you can protect yourself from injury.

Tip
Store the Owner's Manual on your terminal device, for example, so that you can read it whenever you need to.

If you would like to know more about the vehicle or have questions on the material you read, please contact an authorized GASGAS Motorcycles dealer.
The Owner's Manual is an important component of the vehicle. If the vehicle is sold, the Owner's Manual must be downloaded again by the new owner.
The Owner's Manual can be downloaded several times using the QR code or the link on the delivery certificate.

The Owner's Manual is also available for download from your authorized GASGAS Motorcycles dealer and on the GASGAS Motorcycles website. A printed copy can also be ordered from your authorized GASGAS Motorcycles dealer.
IntInternational GASGAS website: http://www.gasgas.com

3.1 Manufacturer warranty, implied warranty

The work specified in the service schedule may only be carried out in an authorized GASGAS Motorcycles workshop and confirmed in the **GASGAS Motorcycles Dealer.net**, as otherwise all warranty claims will be void. Damage or secondary damage caused by tampering with and/or conversions on the vehicle are not covered by the manufacturer warranty.

3.2 Fuel, auxiliary substances

Note

Environmental hazard Improper handling of fuel is a danger to the environment.

– Do not allow fuel to enter the groundwater, the soil, or the sewage system.

Use fuels and auxiliary substances in accordance with the Owner's Manual and specification.

3.3 Spare parts, technical accessories

For your own safety, only use spare parts and accessory products that are approved and/or recommended by GASGAS Motorcycles and have them mounted by an authorized GASGAS Motorcycles workshop. GASGAS Motorcycles accepts no liability for other products and any resulting damage or loss.
Certain spare parts and accessory products are specified in parentheses in the descriptions. Your authorized GASGAS Motorcycles dealer will be glad to advise you.

The latest news **GASGAS Technical Accessories** on your vehicle can be found on the GASGAS Motorcycles website.
IntInternational GASGAS website: http://www.gasgas.com

3.4 Service

A prerequisite for perfect operation and prevention of premature wear is that the service, care, and tuning work on the engine and chassis is properly carried out as described in the Owner's Manual. An incorrect suspension setting can lead to damage and breakage of chassis components.
Use of the vehicle in difficult conditions, such as in rain, dusty or sandy environments, high heat or with a heavy payload, can lead to significantly increased wear on components such as the drivetrain, air filter, brake systems or suspension components. It may therefore be necessary to check parts before each journey or to replace parts before the next service interval is reached.
It is imperative that you adhere to the stipulated run-in times and service intervals. If you observe these exactly, you will ensure a much longer service life for your motorcycle.
The relevant mileage or time interval is whichever occurs first.

3.5 Figures

The figures contained in the manual may depict special equipment.
In the interest of clarity, some components may be shown disassembled or may not be shown at all. It is not always necessary to disassemble the component to perform the activity in question. Please follow the instructions in the text.

3.6 Customer service

Your authorized GASGAS Motorcycles dealer will be happy to answer any questions you may have regarding your vehicle and GASGAS Motorcycles.

A list of authorized GASGAS Motorcycles dealers can be found on the GASGAS Motorcycles website.
IntInternational GASGAS website: http://www.gasgas.com

4.1 View of vehicle, front left (example)

1. Hand brake lever (p. 18)
2. Clutch lever (p. 18)
3. Fuel tank filler cap
4. Side stand (p. 23)
5. Compression damping of the shock absorber (p. 46)
6. Shift lever (p. 22)
7. Tool set

4.2 View of vehicle, rear right (example)

1. Ignition and steering lock (p. 20)
2. Fork compression adjuster
3. Light switch (p. 19)
3. Turn signal switch (p. 19)
3. Horn button (p. 18)
4. Combination switch (p. 20)
5. Emergency OFF switch (p. 19)
5. Start button (p. 19)
6. Throttle grip (p. 18)
7. Fork rebound adjustment
8. Vehicle identification number (p. 16)
9. Foot brake lever (p. 23)

5.1 Vehicle identification number

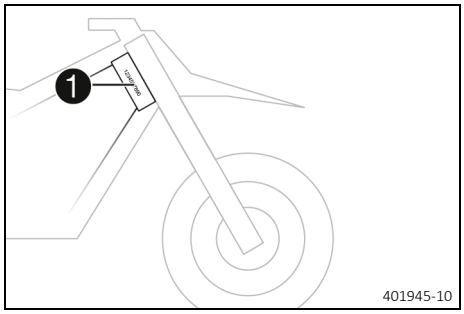

The vehicle identification number ❶ is stamped on the right side of the steering head.

5.2 Type label

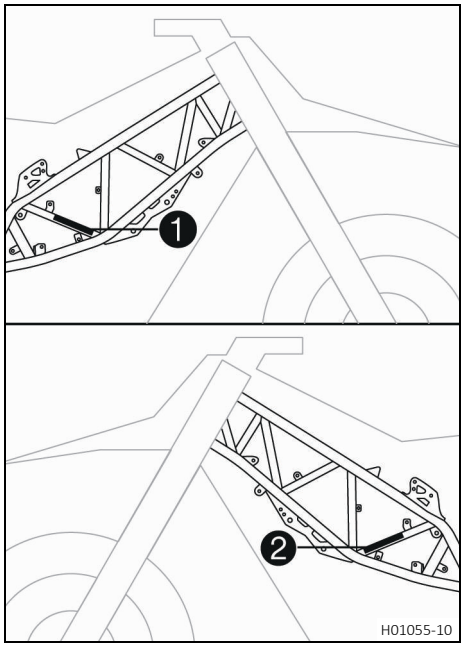

The USA type label ❶ is located on the right side of the frame.
The type label Canada ❷ is located on the left side of the frame.

5.3 Key number

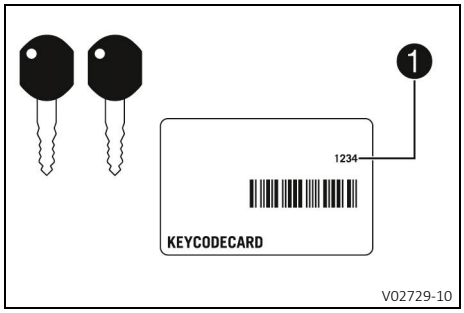

The key number ❶ can be found on the **KEYCODECARD**.

Info
You need the key number to order a spare key. Keep the **KEYCODECARD** in a safe place.

5.4 Engine number

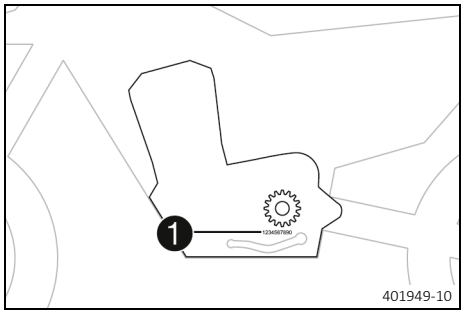

The engine number ❶ is stamped on the left side of the engine under the engine sprocket.

5.5 Fork part number

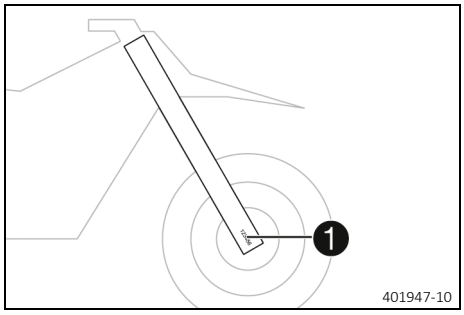

The fork part number ❶ is stamped on the inner side of the fork stub.

5.6 Shock absorber article number

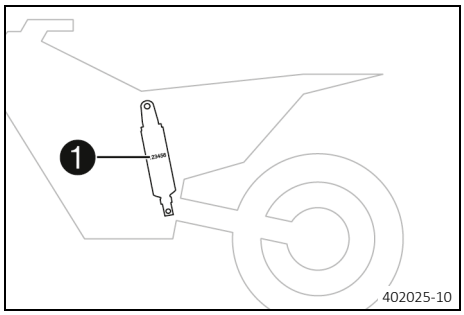

The shock absorber article number ❶ is on the left side of the shock absorber.

6.1 Clutch lever

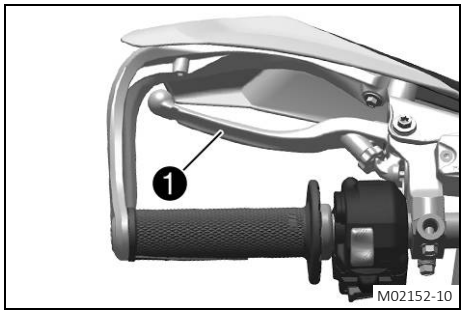

Clutch lever ❶ is fitted on the handlebar on the left.
The clutch is activated hydraulically and adjusts itself automatically.

6.2 Hand brake lever

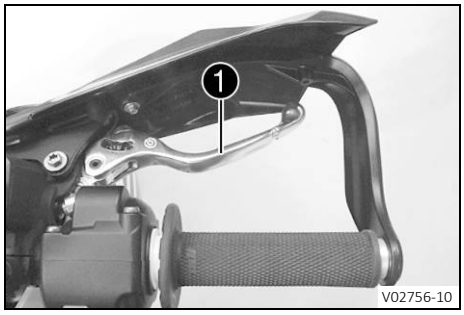

The hand break lever ❶ is fitted on the right side of the handlebar.
The hand brake lever operates the front brake.

6.3 Throttle grip

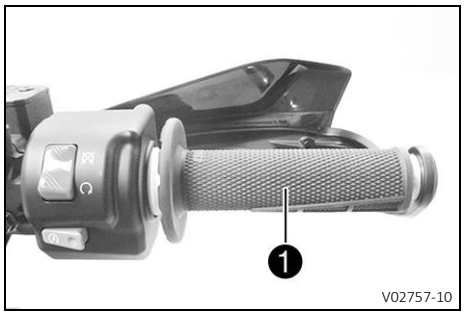

The throttle grip ❶ is fitted on the right side of the handlebar.

6.4 Horn button

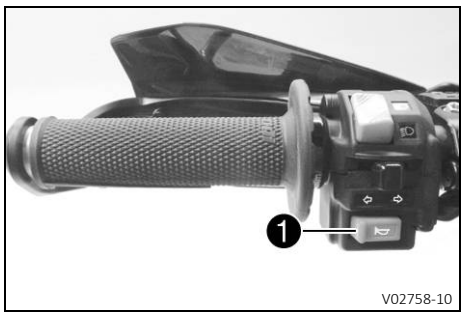

Horn button ❶ is fitted on the left side of the handlebar.

Possible states

- The horn button is in the basic position
- The horn button is pressed – The horn is operated in this position.

6.5 Light switch

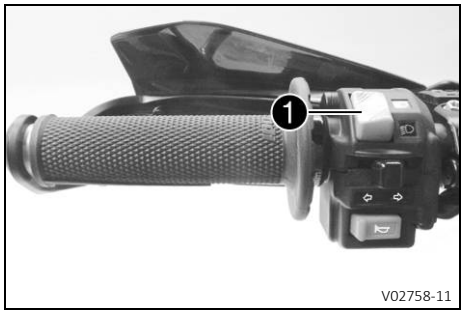

The light switch ❶ is fitted on the left side of the handlebar.

Possible states

	Low beam on – Light switch is turned downward. In this position, the low beam and tail light are switched on.
	High beam on – Light switch is turned upward. In this position, the high beam and tail light are switched on.

6.6 Turn signal switch

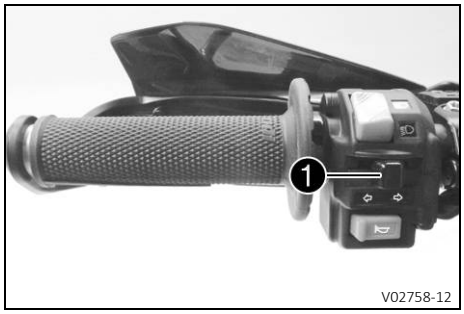

The turn signal switch ❶ is fitted on the left side of the handlebar.

Possible states

	Turn signal off
	Turn signal light, left, on – Turn signal switch pressed to the left. The turn signal switch returns automatically to the central position after use.
	Turn signal light, right, on – Turn signal switch pressed to the right. The turn signal switch returns automatically to the central position after use.

To switch off the turn signal light, press the turn signal switch towards the switch case.

6.7 Emergency OFF switch

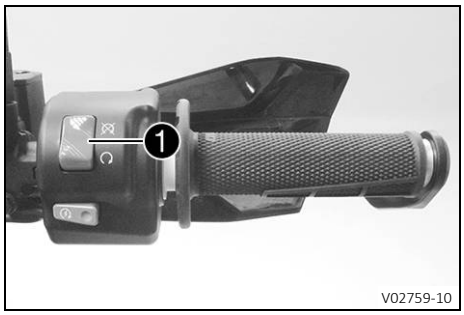

The emergency OFF switch ❶ is fitted on the right side of the handlebar.

Possible states

	Emergency OFF switch off – In this position, the ignition circuit is interrupted, a running engine stops, and the engine cannot be started.
	Emergency OFF switch on – This position is necessary for operation as the ignition circuit is closed.

6.8 Start button

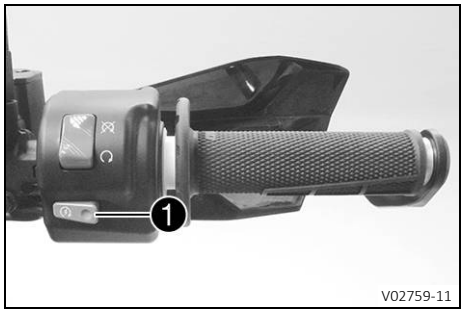

Start button ❶ is fitted on the right side of the handlebar.

Possible states

- The start button is in the basic position
- The start button is pressed – In this position, the starter motor is actuated.

6.9 Combination switch

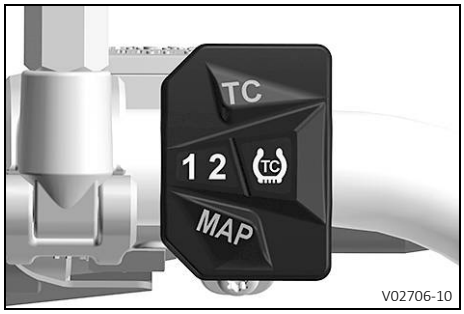

The combination switch is fitted on the left side of the handlebar.

Possible states

1	**STREET** – Riding mode **STREET** and traction control are activated when LED **1** lights up.
1 TC	**STREET** without TC – When LEDs **1** and **TC** light up, riding mode **STREET** is active and traction control is deactivated.
2	**SPORT** – If LED **2** is lit up, riding mode **SPORT**, a subsequently active traction control and ABS mode **Supermoto** are activated.
2 TC	**SPORT** without TC – If LEDs **2** and **TC** are lit up, riding mode **SPORT** and ABS mode **Supermoto** are active. The traction control is deactivated.

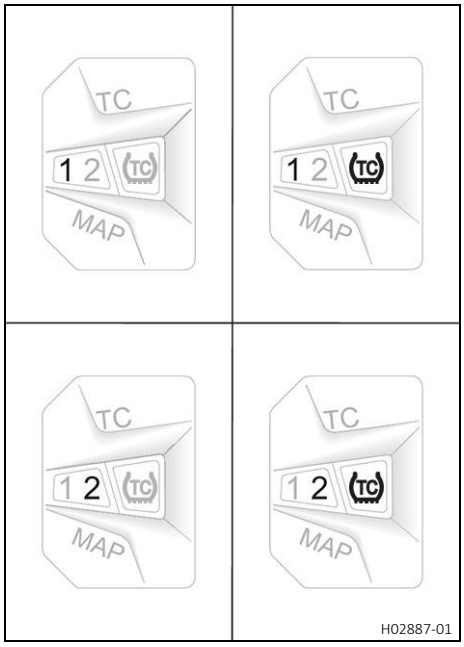

The combination switch displays the current riding mode and traction control setting.
Press button **MAP** on the combination switch to change the riding mode, the traction control and the ABS mode.
The traction control is activated or deactivated using button **TC** on the combination switch.

Info
Each time the ignition is switched on, all three switch LEDs light up for a function check.
If all three LEDs light up during operation, a malfunction has been detected by the engine control unit. Contact an authorized GASGAS Motorcycles workshop immediately.

6.10 Ignition and steering lock

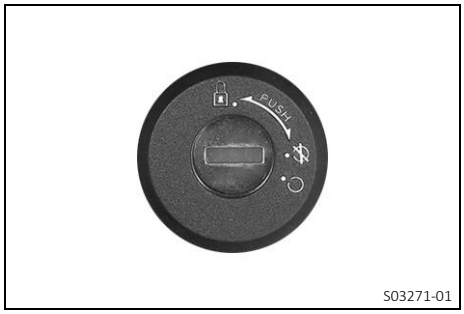

The ignition and steering lock is located in front of the seat.

Possible states

	Ignition off – In this position, the ignition circuit is interrupted, a running engine stops, and a non-running engine will not start. The ignition key can be removed.
	Ignition on – In this position, the ignition circuit is closed and the engine can be started.
	Steering locked – In this position, the ignition circuit is interrupted and the steering locked. The ignition key can be removed.

6.11 ABS button

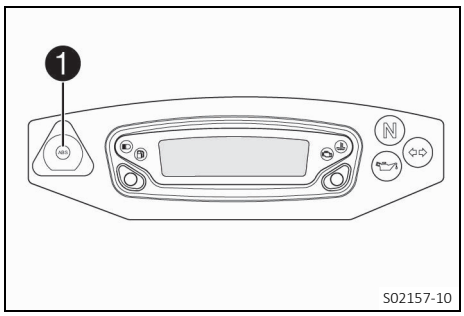

The ABS button ❶ is fitted next to the combination instrument on the left.

Info
The ABS button is also used as the ABS warning lamp (p. 67).

6.12 Overview of indicator lights

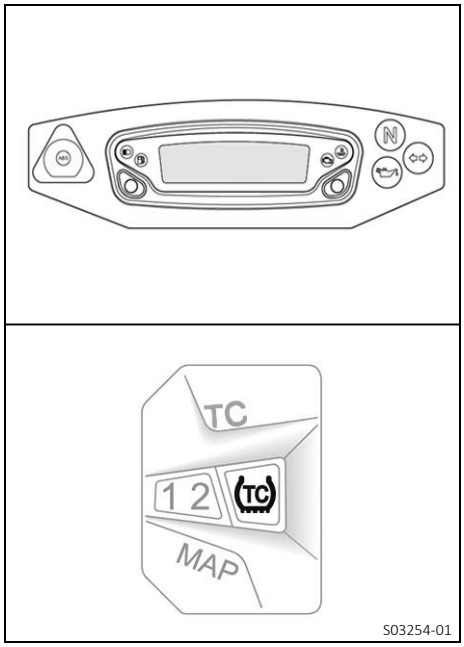

Possible states

ABS	ABS warning lamp lights up/flashes yellow – If the ABS warning lamp lights up, the ABS is not active. The ABS warning lamp also lights up if an error is detected. Contact an authorized GASGAS Motorcycles workshop.
	The high beam indicator lamp lights up blue – The high beam is switched on.
	Fuel level warning lamp lights up orange – The fuel level has reached the reserve mark.
	Malfunction indicator lamp lights up orange – The OBD has detected an error in the vehicle electronics. Come safely to a halt, and contact an authorized GASGAS Motorcycles workshop.
	The coolant temperature warning lamp lights up red – The coolant temperature has reached a critical value. Stop immediately (taking care not to endanger yourself or other road users in the process), switch off the engine, allow it to cool down and check the coolant level.
N	The idle indicator lamp lights up green – The transmission is in neutral.
	Turn signal indicator lamp flashes green – The turn signal is switched on.
	The oil pressure warning lamp lights up red – The oil pressure is too low. Stop immediately, taking care not to endanger yourself or other road users in the process, and switch off the engine.
TC	TC indicator lamp lights up/flashes yellow – If the TC indicator lamp lights up, the MTC (p. 38) is not active. If the TC indicator lamp and both riding mode lamps light up at same time, an error has been detected. Contact an authorized GASGAS Motorcycles workshop. The TC indicator lamp flashes if the MTC actively engages.

6.13 Seat release

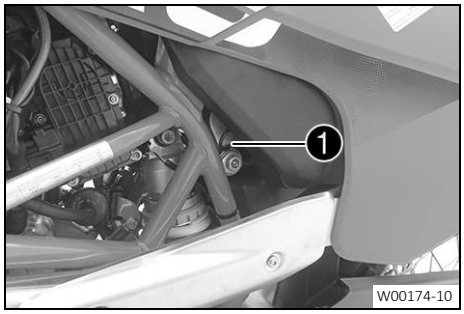

The loop ❶ unlocks the seat.

6.14 Grab handles

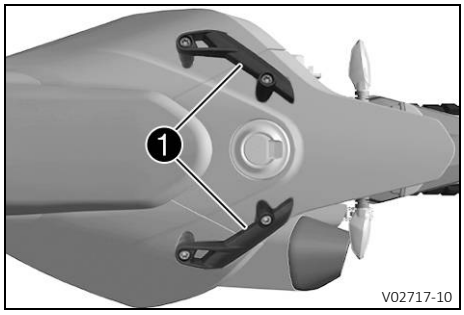

The grab handles ❶ are used for moving the motorcycle around.
If you carry a passenger, the passenger can hold onto the grab handles during the trip.

6.15 Passenger foot pegs

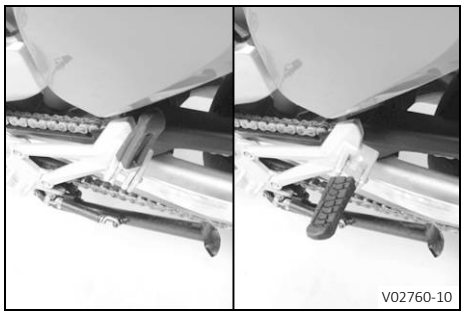

The passenger foot pegs can be folded up and down.

Possible states

- Passenger foot pegs folded up – For operation without a passenger.
- Passenger foot pegs folded down – For operation with a passenger.

6.16 Shift lever

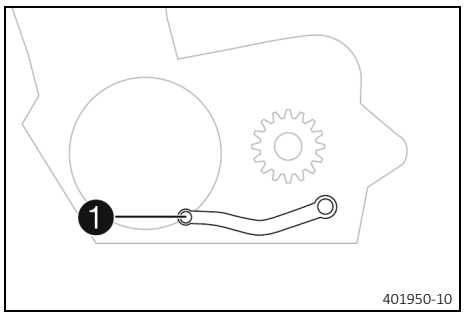

The shift lever ❶ is mounted on the left side of the engine.

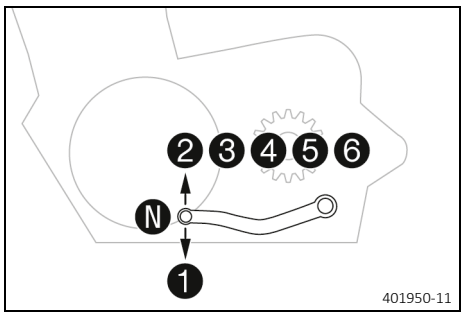

The gear positions can be seen in the photograph.
The neutral or idle position is between the first and second gears.

6.17 Foot brake lever

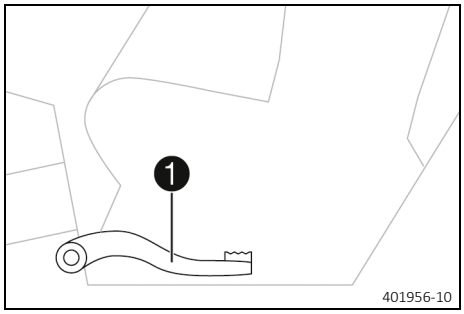

Foot brake lever 1 is located in front of the right footrest.
The rear brake is engaged with the foot brake lever.

6.18 Side stand

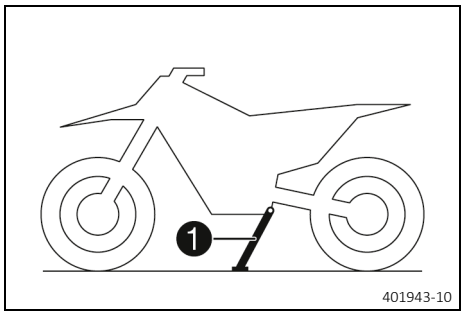

Side stand 1 is located on the left of the vehicle.
The side stand is used for parking the motorcycle.

Info
The side stand must be folded up during motorcycle use.
The side stand is coupled with the safety starting system – see the riding instructions.

Possible states

- Side stand folded out – The vehicle can be supported on the side stand. The safety starting system is active.
- Side stand folded in – This position is mandatory when riding the motorcycle. The safety starting system is inactive.

6.19 Opening the fuel tank filler cap

Danger
Fire hazard Fuel is highly flammable.

The fuel in the fuel tank expands when warm and can escape if overfilled.

– Do not fuel the vehicle in the vicinity of open flames or lit cigarettes.
– Switch off the engine for refueling.
– Make sure that no fuel is spilled; particularly not on hot parts of the vehicle.
– If any fuel is spilled, wipe it off immediately.
– Observe the specifications for refueling.

Warning

Danger of poisoning Fuel is harmful to health.

- Avoid skin, eye and clothing contact with fuel.
- Immediately consult a doctor if you swallow fuel.
- Do not inhale fuel vapors.
- Rinse the affected area immediately with plenty of water in the event of contact with the skin.
- Rinse the eyes thoroughly with water, and consult a doctor in case of fuel contact with the eyes.
- Change your clothing if fuel spills on them.
- Keep fuels correctly in a suitable canister, and out of the reach of children.

Note

Environmental hazard Improper handling of fuel is a danger to the environment.

- Do not allow fuel to enter the groundwater, the soil, or the sewage system.

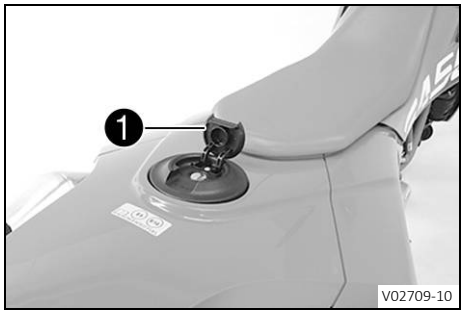

- Lift cover 1 of fuel tank filler cap and insert the ignition key.
- Turn the ignition key 90° counterclockwise and take off the fuel tank filler cap.

Info

The fuel tank filler cap has a fuel tank breather.

6.20 Closing the fuel tank filler cap

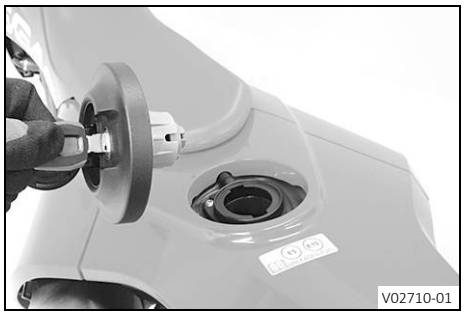

- Put the fuel tank filler cap back on and turn the ignition key 90° clockwise.
- Remove the ignition key and close the cover.

7.1 Overview

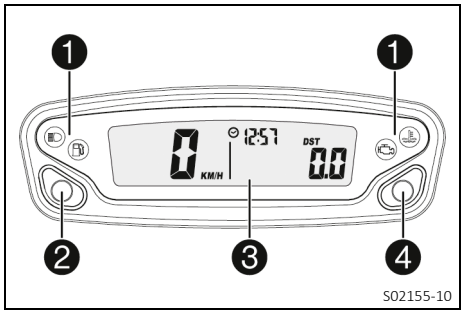

S02155-10

1. Overview of indicator lights (p. 21)
2. Left button
3. Display
4. Right button

7.2 Activation

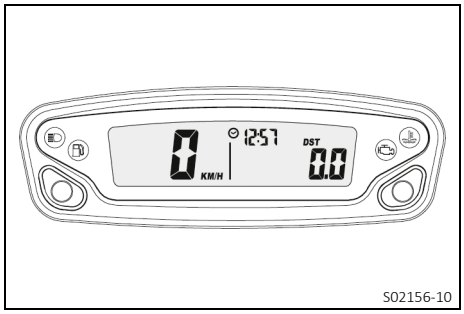

S02156-10

Activating combination instrument
The combination instrument is activated when one of the buttons is pressed or an impulse comes from the wheel speed sensor.

7.3 Messages on the combination instrument

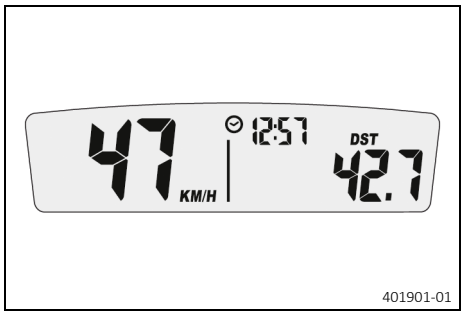

401901-01

Possible states

LO	Battery voltage of the combination instrument – The battery voltage of the combination instrument is too low. Change combination instrument battery.

7.4 Setting the combination instrument

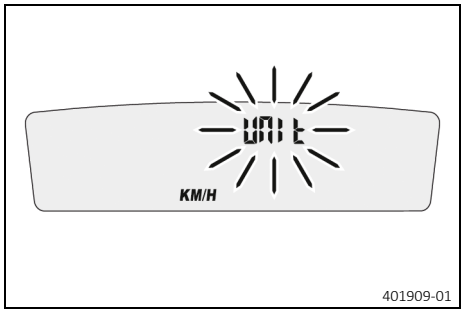

401909-01

Condition
The motorcycle is stationary.

– Press and hold both buttons for 3 – 5 seconds.
  ✔ The Setup menu is displayed. The **UNIT** display flashes.
– Press one of the buttons to select **UNIT** for the speed in kilometers **KM/H** or miles **M/H**.

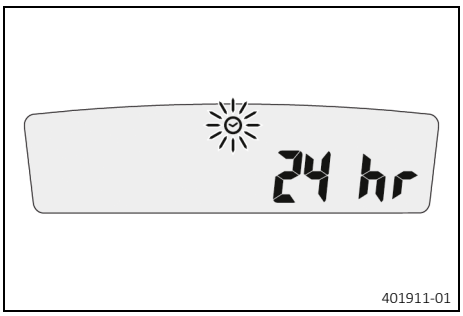

– Wait for 5 seconds.
  ✔ The combination instrument changes to the next menu item. The ⊙ symbol flashes.
– Press one of the buttons to select the 24 h display or 12 h display for the clock.

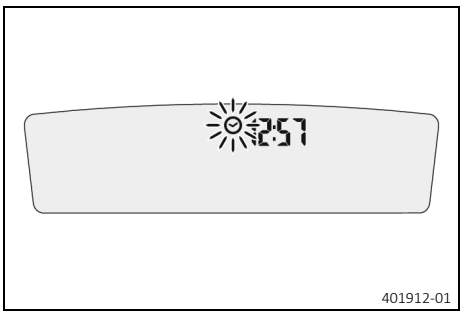

– Wait for 5 seconds.
  ✔ The combination instrument changes to the next menu item. The ⊙ symbol flashes.

Resetting the time
  – Press the left button.
    ✔ The value decreases.

Advancing the time
  – Press the right button.
    ✔ The value increases.

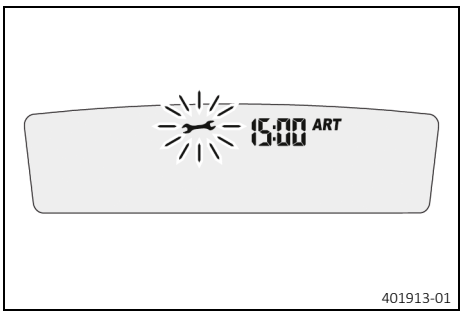

– Wait for 5 seconds.
  ✔ The combination instrument changes to the next menu item. The ⚒ symbol flashes.
– Set the service.

  Guideline

Service display deactivated

Shortening the service interval
  – Press the left button.
    ✔ The value decreases.

Extending the service interval
  – Press the right button.
    ✔ The value increases.

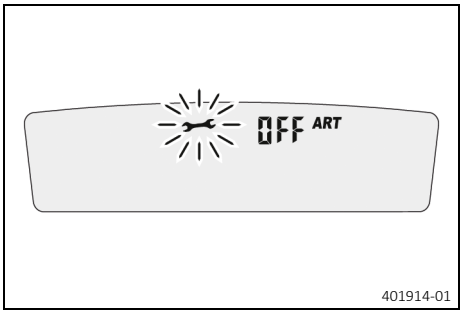

Switching off the service interval display
  – Press and hold the left button.
    ✔ **off** appears in the display.

7.5 Setting kilometers or miles

Info
If the unit is changed, value **ODO** is retained and converted accordingly.

Condition
The motorcycle is stationary.

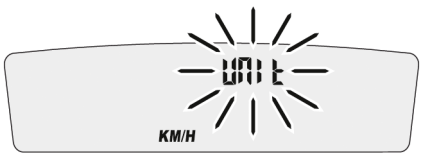

401909-01

– Press and hold both buttons for 3 – 5 seconds.
  ✔ The Setup menu is displayed. The **UNIT** display flashes.
– Press one of the buttons to select **UNIT** for the speed in kilometers **KM/H** or miles **M/H**.

7.6 Setting the clock

Condition
The motorcycle is stationary.

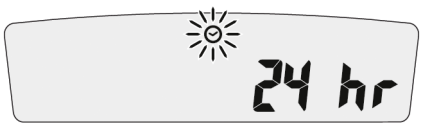

401911-01

– Press and hold both buttons for 3 – 5 seconds.
  ✔ The Setup menu is displayed. The **UNIT** display flashes.
– Wait for the menu of the clock to flash.
– Press one of the buttons to select the 24 h display or 12 h display for the clock.

401912-01

– Wait for 5 seconds.
  ✔ The combination instrument changes to the next menu item. The clock symbol flashes.

Resetting the time
– Press the left button.
  ✔ The value decreases.

Advancing the time
– Press the right button.
  ✔ The value increases.

7.7 Setting the service display

Condition
The motorcycle is stationary.

401913-01

– Press and hold both buttons for 3 – 5 seconds.
  ✔ The Setup menu is displayed. The **UNIT** display flashes.
– Wait for the menu of the service display to flash.
– Set the service.
  Guideline

Service display switched off

Shortening the service interval
– Press the left button.
  ✔ The value decreases.

Extending the service interval
– Press the right button.
  ✔ The value increases.

401914-01

Switching off the service interval display

– Press and hold the left button.

✓ **off** appears in the display.

7.8 Speed, time, and DST distance 1

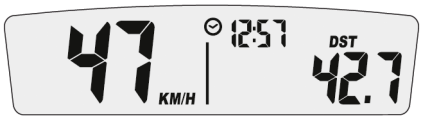

401901-01

– Press one of the buttons until **DST** appears on the combination instrument.

KM/H or **M/H** shows the speed.
⊙ shows the time.
DST shows the distance since the last reset, such as between two refueling stops.

Info
If the value of 39999.9 is exceeded, **DST** is automatically reset to 0.0.

Press the left button briefly.	Next display mode
Press the left button for 3 – 5 seconds.	**DST** can be preset to a value between 0.0 and 39999.9 by pressing the buttons.
Press the right button briefly.	Next display mode
Press the right button for 3 – 5 seconds.	**DST** is reset to 0.0.

7.9 Speed, time, and DST2 distance 2

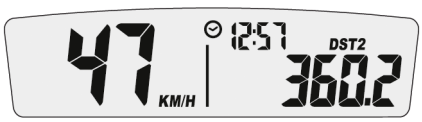

401902-01

– Press one of the buttons until **DST2** appears on the combination instrument.

KM/H or **M/H** shows the speed.
⊙ shows the time.
DST2 shows the distance 2 since the last reset, such as between two refueling stops.

Info
If the value of 39999.9 is exceeded, **DST2** is automatically reset to 0.0.

Press the left button briefly.	Next display mode
Press the left button for 3 – 5 seconds.	**DST2** can be preset to a value between 0.0 and 39999.9 by pressing the buttons.
Press the right button briefly.	Next display mode

Press the right button for 3 – 5 seconds.	**DST2** is reset to 0.0.

7.10 AVG average speed, ART operating hours, and ODO total distance covered

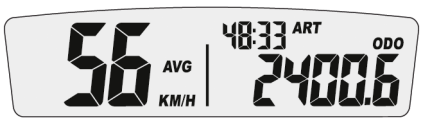

401903-01

– Press one of the buttons until **AVG**, **ART** and **ODO** appear on the combination instrument.

AVG shows the average speed since the last reset.
ART shows the operating hours.
ODO shows the total distance covered.

Press the left button briefly.	Next display mode
Press the left button for 3 – 5 seconds.	The OPEN END WRENCH SYMBOL shows the remaining operating hours until the next service is due.
Press the right button briefly.	Next display mode
Press the right button for 3 – 5 seconds.	**AVG** is reset to 0.0.

8.1 Advice on preparing for first use

Danger

Danger of accidents A rider who is not fit to ride poses a danger to him or herself and others.

– Do not operate the vehicle if you are not fit to ride due to alcohol, drugs or medication.
– Do not operate the vehicle if you are physically or mentally impaired.

Warning

Risk of injury Missing or poor protective clothing presents an increased safety risk.

– Wear appropriate protective clothing such as helmet, boots, gloves as well as trousers and a jacket with protectors on all rides.
– Always wear protective clothing that is in good condition and meets the legal regulations.

Warning

Danger of crashing Different tire tread patterns on the front and rear wheel impair the handling characteristic.

Different tire tread patterns can make the vehicle significantly more difficult to control.

– Make sure that only tires with a similar tire tread pattern are fitted to the front and rear wheel.

Warning

Danger of accidents Non-approved or non-recommended tires and wheels impact the handling characteristic.

– Only use tires/wheels approved by GASGAS with the corresponding speed index.

Warning

Danger of accidents New tires have reduced road grip.

The contact surface on new tires is not yet roughened.

– Run in new tires with moderate riding and only gradually increase the lean angle.
  Run-in distance 200 km (124 mi)

Warning

Danger of accidents The brake system fails in the event of overheating.

If the foot brake lever is not released, the brake linings drag continuously.

– Take your foot off the foot brake lever if you do not want to brake.

Info

When using your vehicle, remember that others may feel disturbed by excessive noise.

– Make sure that the pre-sales inspection work has been carried out by an authorized GASGAS Motorcycles workshop.
  ✔ You will receive a delivery certificate when the vehicle is handed over.
– Before riding for the first time, read the entire Owner's Manual carefully.
– Get to know the controls.
– Adjust basic position of the clutch lever. (📖 p. 65)
– Adjust basic position of the hand brake lever. (📖 p. 68)
– Adjust the basic position of the foot brake lever. 🔧 (📖 p. 71)
– Get used to the handling characteristic of the motorcycle in a suitable area before making a longer trip. Try also to ride as slowly as possible and in a standing position to get a better feel for the motorcycle.
– Hold the handlebar firmly with both hands and keep your feet on the footrests when riding.
– Run the engine in. (📖 p. 31)

8.2 Running in the engine

– During the running-in time, do not exceed the specified vehicle speed in the respective gear.

Guideline

During the first	1,000 km (620 mi)
Maximum speed per gear	
First gear	50 km/h (31.1 mph)
Second gear	70 km/h (43.5 mph)
Third gear	90 km/h (55.9 mph)
Fourth gear	110 km/h (68.4 mph)
Fifth gear	125 km/h (77.7 mph)
Sixth gear	140 km/h (87 mph)

– Avoid fully opening the throttle.

8.3 Loading the vehicle

Warning

Danger of accidents Total weight and axle loads influence the handling characteristic.

The total weight consists of: operational motorcycle with a full tank, rider and, if necessary, a passenger with protective clothing and helmet, and, if necessary, mounted luggage.

– Do not exceed the maximum permissible overall weight or the axle loads.

Warning

Danger of accidents Improper mounting of cases, tank rucksacks or other luggage impairs the handling characteristics.

Luggage mounted incorrectly can slip while the vehicle is in motion.

– Mount and secure all luggage according to the manufacturer's instructions.
– Check that your luggage is fixed properly at regular intervals.

Warning

Danger of accidents Carrying luggage alters handling characteristics at high speed.

– Adapt your speed to your payload.
– Ride more slowly if your motorcycle is loaded with cases or other luggage.

Maximum speed with baggage 130 km/h (80.8 mph)

Warning

Danger of accidents The luggage system will be damaged if it is overloaded.

– Read the manufacturer information on maximum payload when mounting cases.

Warning

Danger of accidents Luggage which has slipped impairs visibility.

If the tail light is covered, you are less visible to traffic behind you, especially when it is dark.

– Check that your luggage is fixed properly at regular intervals.

Warning

Danger of accidents A high payload alters the handling characteristic and increases the stopping distance.

– Adapt your speed to your payload.

Warning

Fire hazard The hot exhaust system may burn luggage.

– Fasten your luggage in such a way that it cannot be burned or singed by the hot exhaust system.

– If luggage is carried, ensure it is fixed firmly as close as possible to the center of the vehicle and ensure even weight distribution between the front and rear wheels.

– Do not exceed the maximum permissible weight and maximum permissible axle loads.

Guideline

Maximum permissible overall weight	350 kg (772 lb.)
Maximum permissible front axle load	150 kg (331 lb.)
Maximum permissible rear axle load	200 kg (441 lb.)

9.1 Checks and maintenance measures when preparing for use

Info
Before every trip, check the condition of the vehicle and ensure that it is roadworthy.
The vehicle must be in perfect technical condition when it is being operated.

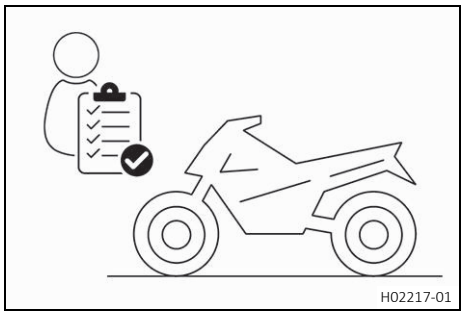

- Check the engine oil level. (p. 102)
- Check the front brake fluid level. (p. 69)
- Check the rear brake fluid level. (p. 72)
- Check that the brake linings of the front brake are secured. (p. 70)
- Check that the brake linings of the rear brake are secured. (p. 74)
- Check that the brake system is functioning properly.
- Check the coolant level. (p. 95)
- Check the chain for dirt. (p. 58)
- Check the chain tension. (p. 59)
- Check the tire condition. (p. 80)
- Check tire pressure. (p. 81)
- Check the settings of all controls and ensure that they can be operated smoothly.
- Check that the electrical system is functioning properly.
- Check that luggage is properly secured.
- Sit on the motorcycle and check the rear mirror setting.
- Check the fuel level.

9.2 Starting the vehicle

Danger
Danger of poisoning Exhaust gases are toxic and inhaling them may result in unconsciousness and death.
- Always make sure there is sufficient ventilation when running the engine.
- Use effective exhaust extraction when starting or running the engine in an enclosed space.

Caution
Danger of accidents Electronic components and safety devices will be damaged if the 12-V battery is discharged or missing.

If the 12-V battery is discharged or defective, malfunctions in the vehicle electronics can occur, especially when starting.

- Never operate the vehicle with a discharged 12-V battery or without a 12-V battery.

Note
Engine damage High revving speed with a cold engine negatively impacts the lifespan of the engine.
- Always run the engine warm at a low speed.

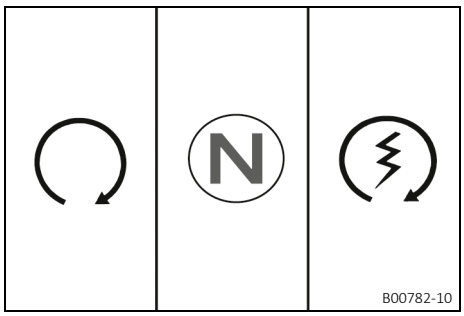

– Turn the emergency OFF switch to the position ◯.
– Switch on the ignition by turning the ignition key to the position ◯.

Guideline

To avoid malfunctions in the control unit communication, do not switch the ignition off and on in rapid succession.

✔ After you switch on the ignition, you can hear the fuel pump operating for about two seconds. The function check of the combination instrument is run at the same time.

✔ The ABS warning lamp lights up and goes out again after starting off.

– Shift the transmission to neutral position.

✔ Green idle indicator lamp **N** lights up.

– Press start button ⓢ.

Info

Do not press the start button until the combination instrument function check has finished.
Do not open the throttle to start.
If the starting attempt is unsuccessful, wait for 15 seconds before making another attempt at starting.
After 6 unsuccessful starting attempts, do not try again, and check the vehicle for other malfunctions instead.
This motorcycle is equipped with a safety starting system. You can only start the engine if the transmission is in neutral or if the clutch lever is pulled when a gear is engaged. If the side stand is folded out and you shift into gear and release the clutch lever, the engine stops.

– Take the weight off the side stand and swing it back up with your foot as far as it will go.

Switching off the ABS

GASGAS Motorcycles recommends riding with ABS at all times. However, situations may arise in which ABS is not advantageous.

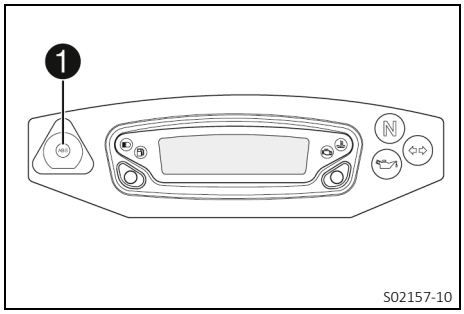

Condition

The motorcycle is stationary.
Vehicle speed before stopping: ≥ 5 km/h (≥ 3.1 mph)

– Press and hold the button ❶ for 3 – 5 seconds.

✔ The ABS warning lamp lights up; ABS is deactivated.

9.3 Starting off

– Pull the clutch lever, engage 1st gear, release the clutch lever slowly and simultaneously open the throttle carefully.

9.4 Shifting, riding

Warning
Danger of accidents Abrupt load alterations can cause the vehicle to get out of control.
– Avoid abrupt load alterations and sudden braking actions.
– Adapt your speed to the road conditions.

Warning
Danger of accidents If you change down at high engine speed, the rear wheel blocks and the engine races.
– Do not change into a low gear at high engine speed.

Warning
Danger of accidents An incorrect ignition key position causes malfunctions.
– Do not change the ignition key position while driving.

Warning
Danger of accidents Adjustments to the vehicle distract attention from traffic activity.
– Make all adjustments when the vehicle is at a standstill.

Warning
Risk of injury The passenger may fall from the motorcycle if they conduct themselves incorrectly.
– Ensure that the passenger sits correctly on the passenger seat, places his or her feet on the passenger foot pegs and holds on to the rider or the grab handles.
– Note the regulations governing the minimum age of passengers in your country.

Warning
Danger of accidents A risky riding style constitutes a major risk.
– Comply with traffic regulations and ride defensively and with foresight to detect sources of danger as early as possible.

Warning
Danger of accidents Cold tires have reduced road grip.
– Ride the first miles carefully on every journey at moderate speed until the tires reach operating temperature.

Warning
Danger of accidents New tires have reduced road grip.

The contact surface on new tires is not yet roughened.

– Run in new tires with moderate riding and only gradually increase the lean angle.

Run-in distance	200 km (124 mi)

Warning
Danger of accidents Total weight and axle loads influence the handling characteristic.

The total weight consists of: operational motorcycle with a full tank, rider and, if necessary, a passenger with protective clothing and helmet, and, if necessary, mounted luggage.

– Do not exceed the maximum permissible overall weight or the axle loads.

Warning

Danger of accidents Improper mounting of cases, tank rucksacks or other luggage impairs the handling characteristics.

Luggage mounted incorrectly can slip while the vehicle is in motion.

– Mount and secure all luggage according to the manufacturer's instructions.
– Check that your luggage is fixed properly at regular intervals.

Warning

Danger of accidents A fall can damage the vehicle more seriously than it may first appear.

– Check the vehicle after a fall as you do when preparing for use.

Note

Engine damage Unfiltered intake air has a negative effect on the service life of the engine.

Dust and dirt will enter the engine without an air filter.

– Only operate the vehicle if it is equipped with an air filter.

Note

Engine failure Overheating damages the engine.

– If the coolant temperature warning is displayed, stop immediately and take care not to endanger yourself or other traffic participants in the process.
– Allow the engine and cooling system to cool down.
– Check and, if necessary, correct the coolant level on the cooling system while it is in a cooled state.

Info

If unusual noises occur while riding, stop safely immediately, switch off the engine, and contact an authorized GAS-GAS Motorcycles workshop.

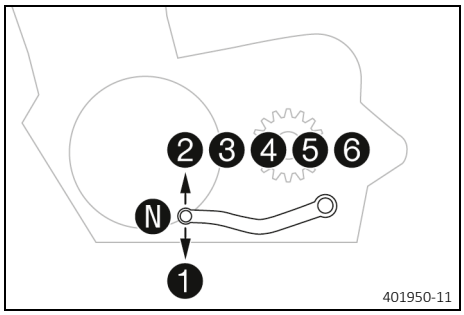

– Shift into a higher gear when conditions allow (incline, road situation, etc.).
– Release the throttle while simultaneously pulling the clutch lever, shift into the next gear, release the clutch lever, and open the throttle.

Info

The gear positions can be seen in the figure. The neutral or idle position is between the first and second gears. First gear is used for starting off or for steep inclines.

– After reaching maximum speed by fully opening the throttle grip, turn the throttle back so it is ¾ open. This will barely reduce the speed, but fuel consumption will be considerably lower.
– Accelerate only up to a speed suitable for the road surface and weather conditions. Particularly in bends, do not shift, and accelerate very carefully.
– Brake if necessary and close the throttle at the same time in order to shift down.
– Pull clutch lever and shift into a lower gear, release the clutch lever slowly, and open the throttle or shift again.
– If the engine stalls (e.g. at an intersection), just pull the clutch lever and press the start button. The transmission must not be shifted into neutral.
– Switch off the engine if you are likely to be running at idle speed or stationary for a long time.

- Avoid frequent and lengthy slipping of the clutch. This causes the engine oil, engine and cooling system to heat up.
- Ride at a low engine speed instead of at a high engine speed with a slipping clutch.
- If the oil pressure warning lamp lights up, stop immediately, taking care not to endanger yourself or other road users in the process, and switch off the engine. Contact an authorized GASGAS Motorcycles workshop.
- If the malfunction indicator lamp lights up during a trip, please contact an authorized GASGAS Motorcycles workshop as soon as possible.
- Quickshifter + allows you to shift up in the speed range shown without pulling the clutch lever.

  Guideline

Minimum speed before gear change	
First gear to second gear	30 km/h (18.6 mph)
Second gear to third gear	40 km/h (24.9 mph)
Third gear to fourth gear	50 km/h (31.1 mph)
Fourth gear to fifth gear	55 km/h (34.2 mph)
Fifth gear to sixth gear	60 km/h (37.3 mph)

- Quickshifter + allows you to shift down in the speed range shown without pulling the clutch lever.

  Guideline

Maximum speed before gear change	
Sixth gear to fifth gear	165 km/h (102.5 mph)
Fifth gear to fourth gear	145 km/h (90.1 mph)
Fourth gear to third gear	120 km/h (74.6 mph)
Third gear to second gear	90 km/h (55.9 mph)
Second gear to first gear	60 km/h (37.3 mph)

9.5 QUICKSHIFTER+

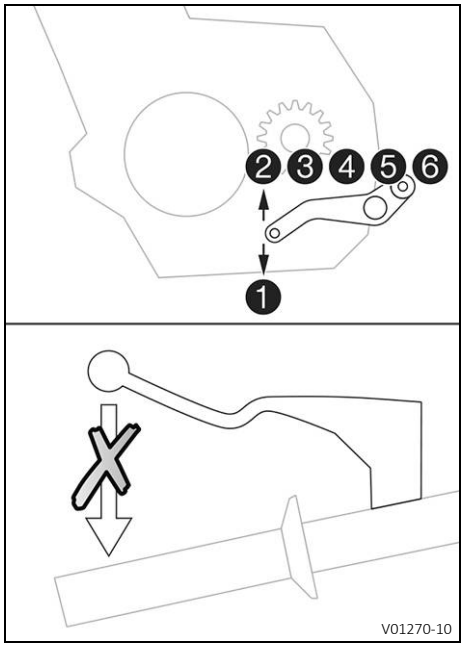

If the QUICKSHIFTER+ is activated, you can shift up and down without actuating the clutch.
Because there is no need to close the throttle grip, uninterrupted gear shifts are possible.
The QUICKSHIFTER+ uses the shift shaft position to check whether or not a shift should be initiated, and sends a corresponding signal to the engine control unit.

9.6 Motorcycle traction control

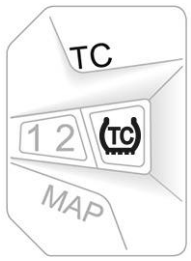

H02885-01

The motorcycle traction control (cornering MTC) lowers the engine torque in case of loss of traction in the rear wheel. Depending on the riding mode, different amounts of slip are allowed when the traction control is activated.

Info
When motorcycle traction control is switched off, the rear wheel may spin during strong acceleration and on surfaces with low grip, resulting in a risk of crashing.
After the ignition is switched on, motorcycle traction control is enabled again.

The motorcycle traction control **MTC** is switched on and off on the left combination switch using the **TC** button.

Info
When the motorcycle traction control is active, the TC indicator lamp flashes.
When motorcycle traction control is switched off, the TC indicator lamp lights up.

9.7 Braking

Warning
Danger of accidents Moisture and dirt impair the brake system.
– Brake carefully several times to dry out and remove dirt from the brake linings and the brake discs.

Warning
Danger of accidents A spongy pressure point on the front or rear brake reduces braking efficiency.
– Check the brake system and do not continue riding until the problem is eliminated. (Your authorized GAS-GAS Motorcycles workshop will be glad to help.)

Warning
Danger of accidents The brake system fails in the event of overheating.
If the foot brake lever is not released, the brake linings drag continuously.
– Take your foot off the foot brake lever if you do not want to brake.

Warning
Danger of accidents Higher total weight increases the stopping distance.
– Take the longer stopping distance into account when carrying a passenger or luggage with you.

Warning
Danger of accidents Salt on the roads impairs the brake system.
– Brake carefully several times to remove salt from the brake linings and the brake discs.

Warning
Danger of accidents ABS may increase the stopping distance in certain situations.
– Adjust application of the brakes to the respective riding situation and riding surface conditions.

Warning
Danger of accidents Excessively forceful application of the brakes blocks the wheels.

The ABS effectiveness is only ensured if it is switched on.

– Leave the ABS switched on in order to benefit from the protective effect.

Warning
Danger of accidents The rear wheel can lock due to the engine braking effect.
– Pull in the clutch, if you perform emergency or full braking, or if you brake on a slippery ground.

– To brake release the throttle and apply the front and rear brakes at the same time.

Info
When the ABS is enabled, you can achieve maximum braking power even on low grip surfaces such as sandy, wet, or slippery terrain without the danger of the wheels locking.

Warning
Danger of accidents Banked or laterally sloping ground reduces the maximum possible delay.
– If possible finish braking before going into a bend.

– Always finish braking before you go into a bend. Change down to a lower gear appropriate to your road speed.
– Use the braking effect of the engine on long downhill stretches. Change down one or two gears, but do not over-rev the engine. You will have to apply the brakes far less frequently as a result and the brake system will not overheat.

9.8 Stopping, parking

Warning
Risk of injury People who act without authorization endanger themselves and others.
– Do not leave the vehicle unattended if the engine is running.
– Protect the vehicle against access by unauthorized persons.
– Lock the steering and remove the ignition key if you leave the vehicle unattended.

Warning
Danger of burns Some vehicle components become hot when the vehicle is operated.
– Do not touch any parts such as the exhaust system, radiator, engine, damper, or brake system before the vehicle parts have cooled down.
– Let the vehicle parts cool down before you perform any work on the vehicle.

Note
Material damage The vehicle may be damaged by incorrect procedure when parking.

Significant damage may be caused if the vehicle rolls away or falls over.
The components for parking the vehicle are designed only for the weight of the vehicle.

– Park the vehicle on a firm and level surface.
– Ensure that nobody sits on the vehicle when the vehicle is parked on a stand.

Note
Fire hazard Hot vehicle components pose a fire hazard and explosion risk.
– Do not park the vehicle near to materials which are highly flammable or explosive.
– Allow the vehicle to cool down before covering it.

– Apply the brakes on the motorcycle.
– Shift the transmission to neutral position.

– Switch off the ignition by turning the ignition key to the position ⊗.

Info
If the engine is switched off with the emergency OFF switch and the ignition remains switched on at the ignition lock, power continues to flow to most power consumers. This discharges the 12-V battery. You should therefore always switch off the engine with the ignition lock – the emergency OFF switch is intended for emergencies only.

– Park the motorcycle on a firm surface.
– Swing side stand forward with your foot as far as it will go and lean the vehicle on it.
– Lock the steering by turning the handlebar fully to the left, pressing down the ignition key to the position ⊗ and turning it to the position 🔒. To make the steering lock engage more easily, move the handlebar a little to the left and right. Remove the ignition key.

9.9 Transport

Note
Material damage The vehicle may be damaged by incorrect procedure when parking.

Significant damage may be caused if the vehicle rolls away or falls over.

The components for parking the vehicle are designed only for the weight of the vehicle.

– Park the vehicle on a firm and level surface.
– Ensure that nobody sits on the vehicle when the vehicle is parked on a stand.

Note
Fire hazard Hot vehicle components pose a fire hazard and explosion risk.
– Do not park the vehicle near to materials which are highly flammable or explosive.
– Allow the vehicle to cool down before covering it.

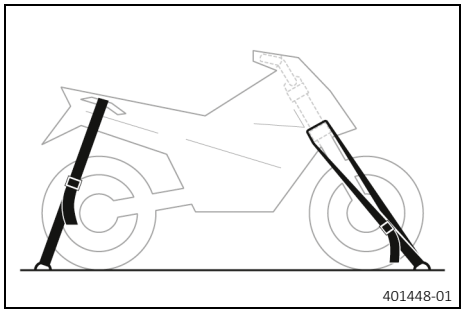

– Switch off the engine and remove the ignition key.
– Use tension belts or other suitable devices to secure the motorcycle against falling over or rolling away.

9.10 Towing in the event of a breakdown

Note
Danger of damage Towing away using a towing vehicle is not an appropriate vehicle recovery method.

Damage to the drive train or transmission may occur during towing.

– Do not use towing equipment where the wheels of the broken down vehicle remain on the road and rotate as it is towed.
– Always transport a broken down vehicle on a trailer or on the loading area of a transport vehicle.

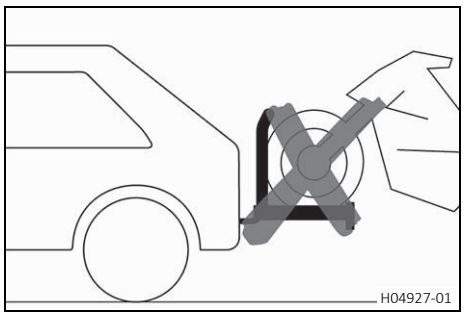

- Ensure that the broken down vehicle is properly secured on the trailer or transport vehicle.
- Observe local regulations for the recovery of broken down vehicles.

9.11 Refueling

Danger

Fire hazard Fuel is highly flammable.

The fuel in the fuel tank expands when warm and can escape if overfilled.

- Do not fuel the vehicle in the vicinity of open flames or lit cigarettes.
- Switch off the engine for refueling.
- Make sure that no fuel is spilled; particularly not on hot parts of the vehicle.
- If any fuel is spilled, wipe it off immediately.
- Observe the specifications for refueling.

Warning

Danger of poisoning Fuel is harmful to health.

- Avoid skin, eye and clothing contact with fuel.
- Immediately consult a doctor if you swallow fuel.
- Do not inhale fuel vapors.
- Rinse the affected area immediately with plenty of water in the event of contact with the skin.
- Rinse the eyes thoroughly with water, and consult a doctor in case of fuel contact with the eyes.
- Change your clothing if fuel spills on them.

Note

Material damage Inadequate fuel quality causes the fuel filter to quickly become clogged.

In some countries and regions, the available fuel quality and cleanliness may not be sufficient. This will result in problems with the fuel system.

- Refuel only with clean fuel that meets the specified standards. (Your authorized GASGAS Motorcycles workshop will be glad to help.)

Note

Environmental hazard Improper handling of fuel is a danger to the environment.

- Do not allow fuel to enter the groundwater, the soil, or the sewage system.

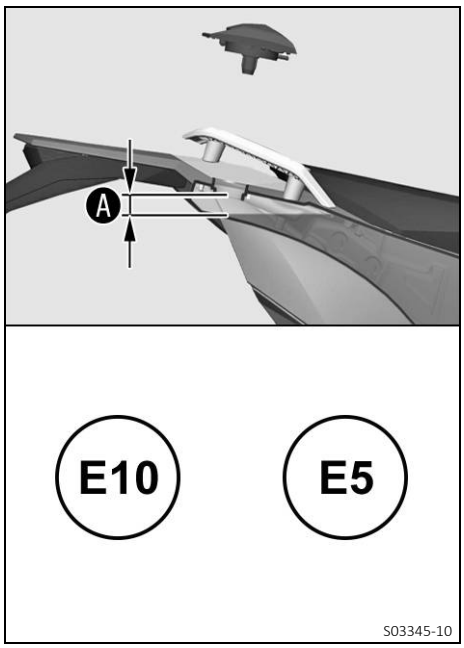

- Switch off the engine.
- Open the fuel tank filler cap. (p. 23)
- Fill the fuel tank with fuel up to level A.

  Guideline

Dimension A	20 mm (0.79 in)

Fuel tank capacity, approx.	13.1 l (3.46 US gal)	Super unleaded (ROZ 95) (p. 123)

- Close the fuel tank filler cap. (p. 24)

10.1 Additional information

Any further work that results from the service work must be ordered separately and invoiced separately.
Different service intervals may apply in your country, depending on the local operating conditions.
Individual service intervals and scopes may change in the course of technical developments. The most up-to-date service schedule can always be found on GASGAS Motorcycles Dealer.net. Your authorized GASGAS Motorcycles dealer will be glad to advise you.

10.2 Service schedule

	after 1,000 km (620 mi)	every 10,000 km (6,200 mi)	every 20,000 km (12,400 mi)	every 30,000 km (18,600 mi)	every 12 months	every 24 months	every 48 months
Read out the fault memory using the GASGAS Motorcycles diagnostics tool.	○	●	●	●	●	●	●
Program the shift shaft sensor.	○	●	●	●	●	●	●
Check that the electrical system is functioning properly.	○	●	●	●	●	●	●
Check that the brake linings of the front brake are secured. (p. 70)	○	●	●	●	●	●	●
Check that the brake linings of the rear brake are secured. (p. 74)	○	●	●	●	●	●	●
Check the brake discs. (p. 68)	○	●	●	●	●	●	●
Check the brake lines for damage and tightness.	○	●	●	●	●	●	●
Check the front brake fluid level. (p. 69)	○	●	●	●	●		
Change the front brake fluid.						●	●
Check the rear brake fluid level. (p. 72)	○	●	●	●	●		
Change the rear brake fluid.						●	●
Check/correct the fluid level of hydraulic clutch. (p. 65)		●	●	●	●		
Change the hydraulic clutch fluid.						●	●
Check the free travel of the foot brake lever. (p. 71)	○	●	●	●	●	●	●
Change the engine oil and the oil filter, clean the oil screens. (p. 102)	○	●	●	●	●	●	●
Check all hoses (e.g. fuel, cooling, bleeder, drainage hoses, etc.) and sleeves for cracking, tightness, and correct routing.		●	●	●	●	●	●
Empty the drainage hoses.	○	●	●	●	●	●	●
Check the cables for damage and for routing without kinks.		●	●	●	●	●	●
Check the frame.				●			
Check the link fork.				●			
Check the fork bearing for play.		●	●	●			
Check the steering head bearing for play.	○	●	●	●	●	●	●
Check the wheel bearing for play.	○	●	●	●	●	●	●
Check the shock absorber and fork for leaks. Perform a fork service and shock absorber service as needed and depending on how the vehicle is used.	○	●	●	●	●	●	●
Check the tire condition. (p. 80)	○	●	●	●	●	●	●
Check tire pressure. (p. 81)	○	●	●	●	●	●	●
Check the chain, rear sprocket, engine sprocket, and chain guide. (p. 61)		●	●	●	●	●	●
Check the chain tension. (p. 59)	○	●	●	●	●	●	●
Grease all moving parts (e.g. side stand, hand lever, chain, etc.) and check for smooth operation.	○	●	●	●	●	●	●
Change the spark plugs.			●				

	after 1,000 km (620 mi)	every 10,000 km (6,200 mi)	every 20,000 km (12,400 mi)	every 30,000 km (18,600 mi)	every 12 months	every 24 months	every 48 months
Check the valve clearance. 🔧		●	●	●			
Change the air filter, clean the air filter box. 🔧		●	●	●			
Change the fuel screen, check the fuel pressure. 🔧	○						
Check the fuel pressure. 🔧		●	●	●	●	●	●
Check the headlight setting. (📖 p. 91)	○	●	●	●			
Check the tightness of the safety-relevant screws and nuts which are easily accessible. 🔧	○	●	●	●	●	●	●
Clean the dust boots of the fork legs. (📖 p. 52)		●	●	●			
Check that the radiator fan is functioning properly. 🔧	○	●	●	●	●	●	●
Check the antifreeze and coolant level. (📖 p. 94)	○	●	●	●	●	●	
Change the coolant. 🔧 (📖 p. 98)							●
Final check: Check the vehicle is roadworthy and take a test ride. 🔧	○	●	●	●	●	●	●
Read out the fault memory after the test ride using the GASGAS Motorcycles diagnostics tool. 🔧	○	●	●	●	●	●	●
Set the service display. (📖 p. 27)	○	●	●	●	●	●	●
Make a service entry in **GASGAS Motorcycles Dealer.net**. 🔧	○	●	●	●	●	●	●

○ One-time interval

● Periodic interval

11.1 Fork/shock absorber

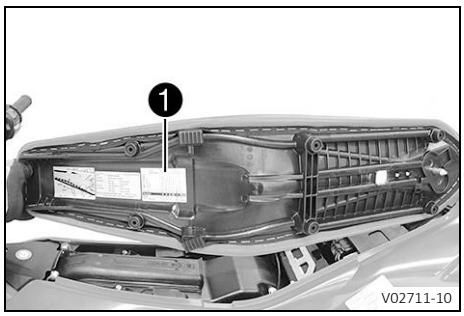

The fork and the shock absorber offer many options for adapting the chassis to the riding style and the payload.

Info
The recommendations for the suspension setting are shown in table 1. The table is located on the underside of the front rider's seat.

These adjustments should be understood as a guideline and should always be the basis for one’s own personal suspension setting. Do not change the adjustments at random, as otherwise the riding characteristics could deteriorate, particularly at high speeds.

11.2 Adjusting the compression damping of the fork

Info
The hydraulic compression damping determines the fork suspension behavior.

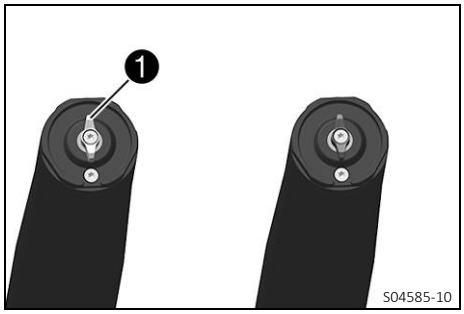

– Turn white adjusting screw 1 clockwise as far as it will go.

Info
The adjusting screw 1 is located at the upper end of the left fork leg.
The compression damping is located in left fork leg **COMP** (white adjusting screw). The rebound damping is located in right fork leg **REB** (red adjusting screw).

– Turn counterclockwise by the number of clicks corresponding to the fork type.

Guideline

Compression damping	
Standard	15 clicks

Info
Turn clockwise to increase damping; turn counterclockwise to reduce damping during compression.

11.3 Adjusting the rebound damping of the fork

Info
The hydraulic rebound damping determines the fork suspension behavior.

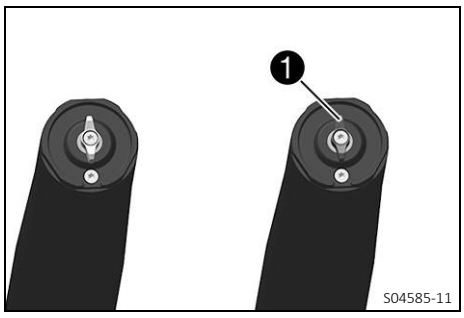

– Turn red adjusting screw ❶ clockwise as far as it will go.

Info
Adjusting screw ❶ is located at the upper end of the right fork leg.
The rebound damping is located in right fork leg **REB** (red adjusting screw). The compression damping is located in left fork leg **COMP** (white adjusting screw).

– Turn counterclockwise by the number of clicks corresponding to the fork type.

Guideline

Rebound damping	
Standard	15 clicks

Info
Turn clockwise to increase the damping; turn counterclockwise to reduce damping when the shock absorber rebounds.

11.4 Compression damping of the shock absorber

The compression damping of the shock absorber is divided into two ranges: high-speed and low-speed.
High-speed and low-speed refer to the compression speed of the rear wheel suspension and not to the vehicle speed.
The high-speed compression adjuster, for example, has an effect when riding over an asphalt edge: the rear wheel suspension compresses quickly.
The low-speed compression adjuster has an effect, for example, when riding over long ground swells: the rear wheel suspension compresses slowly.
These two ranges can be adjusted separately, although the transition between high-speed and low-speed is gradual. Thus, modifications in the high-speed range affect the compression damping in the low-speed range and vice versa.

11.5 Adjusting the low-speed compression damping of the shock absorber

Caution
Risk of injury Parts of the shock absorber will move around if the shock absorber is detached incorrectly.

The shock absorber is filled with highly compressed nitrogen.

– Please follow the description provided. (Your authorized GASGAS Motorcycles workshop will be glad to help.)

Info
The effect of the low-speed compression adjuster can be seen in slow to normal compression of the shock absorber.

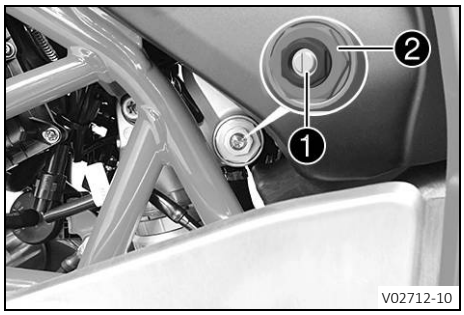

– Turn adjusting screw ❶ clockwise with a screwdriver as far as the last perceptible click.

Info
Do not loosen fitting ❷!

– Turn counterclockwise by the number of clicks corresponding to the shock absorber type.

Guideline

Low-speed compression damping	
Comfort	20 clicks
Standard	15 clicks
Sport	10 clicks
Full payload	10 clicks

Info
Turn clockwise to increase damping; turn counterclockwise to reduce damping.

11.6 Adjusting the high-speed compression damping of the shock absorber

Caution
Risk of injury Parts of the shock absorber will move around if the shock absorber is detached incorrectly.

The shock absorber is filled with highly compressed nitrogen.

– Please follow the description provided. (Your authorized GASGAS Motorcycles workshop will be glad to help.)

Info
The effect of the high-speed compression adjuster can be seen in fast compression of the shock absorber.

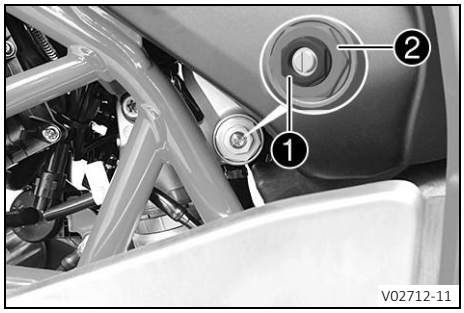

– Turn adjusting screw ❶ all the way clockwise with a socket wrench.

Info
Do not loosen fitting ❷!

– Turn counterclockwise by the number of turns corresponding to the shock absorber type.

Guideline

High-speed compression damping	
Comfort	2 turns
Standard	1.5 turns
Sport	1 turn
Full payload	1 turn

Info
Turn clockwise to increase damping; turn counterclockwise to reduce damping.

11.7 Adjusting the rebound damping of the shock absorber

Caution

Risk of injury Parts of the shock absorber will move around if the shock absorber is detached incorrectly.

The shock absorber is filled with highly compressed nitrogen.

– Please follow the description provided. (Your authorized GASGAS Motorcycles workshop will be glad to help.)

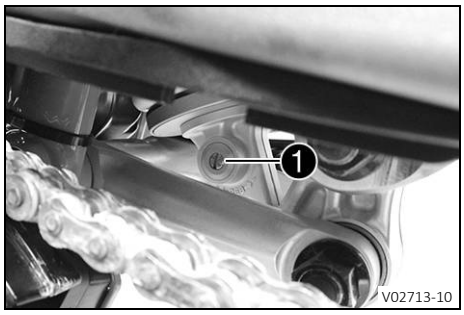

– Turn adjusting screw 1 clockwise up to the last perceptible click.
– Turn counterclockwise by the number of clicks corresponding to the shock absorber type.

Guideline

Rebound damping	
Comfort	20 clicks
Standard	15 clicks
Sport	10 clicks
Full payload	10 clicks

Info

Turn clockwise to increase damping; turn counterclockwise to reduce damping.

11.8 Handlebar position

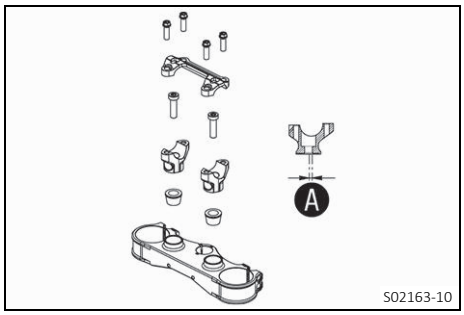

The holes on the handlebar support are placed at a distance of A from the center.

Hole distance A	3.5 mm (0.138 in)

The handlebar can be mounted in 2 different positions. This allows the handlebar to be mounted in the most comfortable position for the rider.

11.9 Adjusting the handlebar position

Warning

Danger of accidents A repaired handlebar poses a safety risk.

If the handlebar is bent or straightened, the material becomes fatigued. The handlebar may break as a result.

– Change the handlebar if the handlebar is damaged or bent.

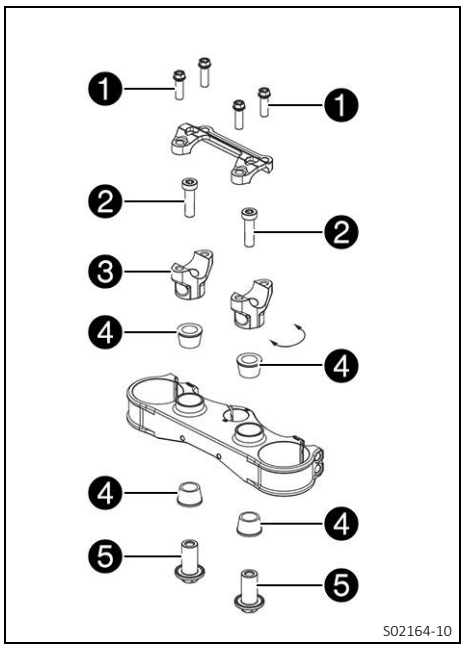

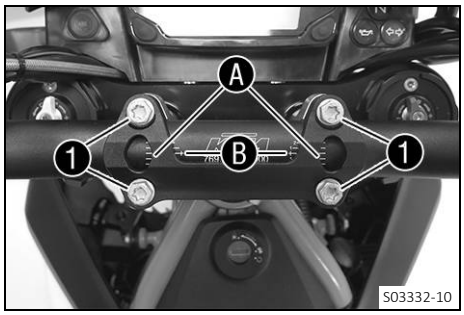

– Remove screws ❶. Take off the handlebar clamp. Take off the handlebar and lay it to one side.

Info
Cover the components to protect them against damage.
Do not kink the cables or lines.

– Remove screws ❷. Take off handlebar support ❸.
– Position rubber bushings ❹ and push through nuts ❺ from below.
– Place the handlebar support in the required position.

Info
The handlebar supports are longer and higher on one side.
Position the left and right handlebar supports evenly.

– Mount and tighten screws ❷.

Guideline

Screw, handlebar support	M10	45 Nm (33.2 lbf ft) **Loctite®243™**

– Position the handlebar.

Info
Make sure the cables and wiring are positioned correctly.

– Position the handlebar clamp.
– Mount screws ❶, but do not tighten yet.
  ✔ Handlebar clamp marking Ⓐ is aligned with centre line Ⓑ of the handlebar scale.
– First bolt the handlebar clamp with screws ❶ onto the longer, higher side of the handlebar supports so that both parts touch.
– Tighten screws ❶ evenly.

Guideline

Screw, handlebar clamp	M8	20 Nm (14.8 lbf ft)

12.1 Raising the motorcycle with a lift stand

Note

Danger of damage The parked vehicle can roll away or fall over.

– Park the vehicle on a firm and level surface.

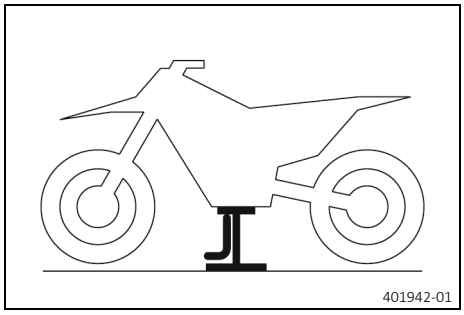

– Raise the motorcycle in the area of the footrest bracket.

✔ Neither wheel is in contact with the ground.

– Secure the motorcycle against falling over.

12.2 Removing the motorcycle from the lift stand

Note

Danger of damage The parked vehicle can roll away or fall over.

– Park the vehicle on a firm and level surface.

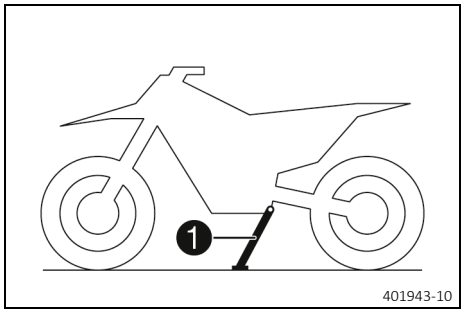

– Remove the motorcycle from the lift stand and rest it on side stand ❶.

– Remove the lift stand.

12.3 Raising the motorcycle with rear lifting gear

Note

Danger of damage The parked vehicle can roll away or fall over.

– Park the vehicle on a firm and level surface.

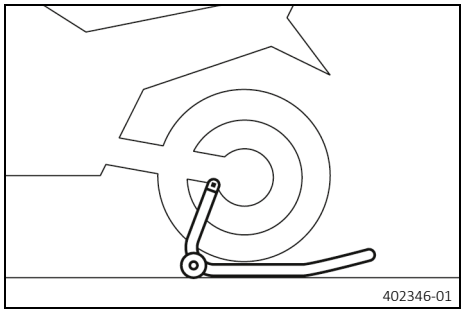

– Insert the adapter in a suitable lifting gear and screw into the link fork on both sides.

– Position the motorcycle vertically, align the lifting gear, and raise the motorcycle.

12.4 Removing the rear of the motorcycle from the wheel stand

Note

Danger of damage The parked vehicle can roll away or fall over.

– Park the vehicle on a firm and level surface.

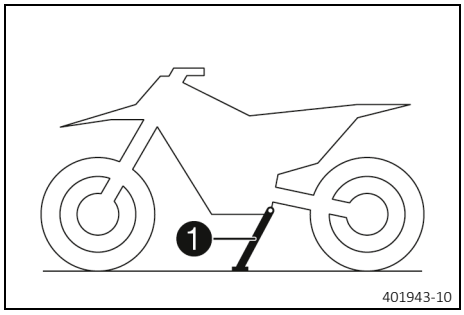

– Secure the motorcycle against falling over.
– Remove the rear wheel stand and lean the vehicle on side stand ❶.

12.5 Lifting the motorcycle with the front lifting gear

Note

Danger of damage The parked vehicle can roll away or fall over.

– Park the vehicle on a firm and level surface.

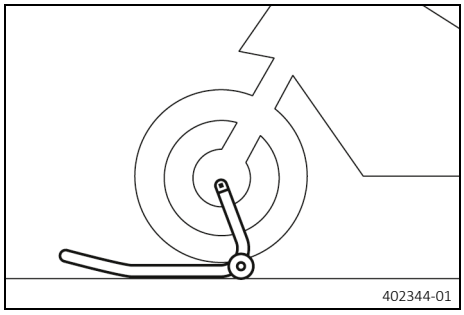

Preparatory work

– Raise the motorcycle with the rear lifting gear. (p. 50)

Main work

– Move the handlebar to the straight-ahead position, align suitable lifting gear at the front.

Info
Always raise the motorcycle at the rear first.

– Lift the motorcycle at the front.

12.6 Taking the motorcycle off the front lifting gear

Note

Danger of damage The parked vehicle can roll away or fall over.

– Park the vehicle on a firm and level surface.

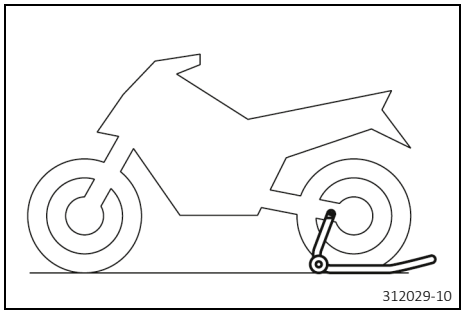

– Secure the motorcycle against falling over.
– Remove the front lifting gear.

12.7 Cleaning the dust boots of the fork legs

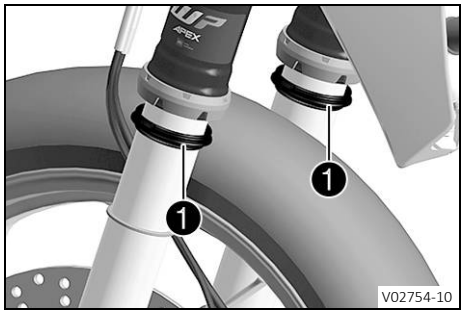

Preparatory work

– Raise the motorcycle with a lift stand. (p. 50)
– Remove fork protector. (p. 52)

Main work

– Push dust boots ❶ of both fork legs downward.

Info
The dust boots remove dust and coarse dirt particles from the inside fork tubes. Over time, dirt can accumulate behind the dust boots. If this dirt is not removed, the oil seals behind can start to leak.

Warning
Danger of accidents Oil or grease on the brake discs reduces the braking effect.
– Always keep the brake discs free of oil and grease.
– Clean the brake discs with brake cleaner when necessary.

– Clean and oil the dust boots and inner fork tubes of both fork legs.

Universal oil spray (p. 124)

– Press the dust boots back into the installation position.
– Remove the excess oil.

Finishing work

– Install the fork protector. (p. 53)
– Remove the motorcycle from the lift stand. (p. 50)

12.8 Removing fork protector

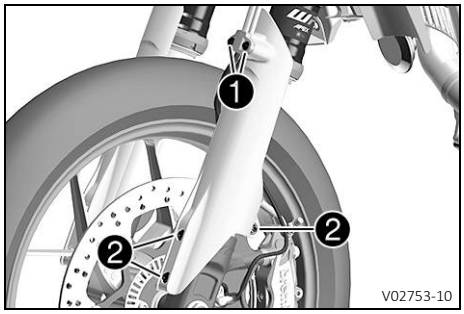

– Remove screws ❶ and take off the clamp.
– Remove screws ❷ on the left fork leg. Take off the fork protector.
– Remove screws ❷ on the right fork leg. Take off the fork protector.

12.9 Installing the fork protector

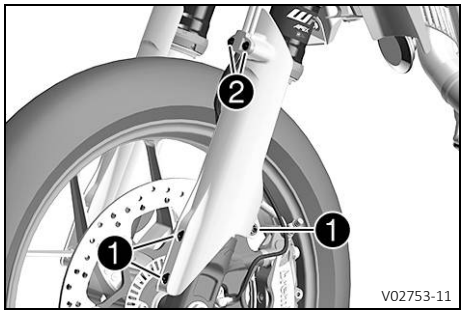

– Position the left fork protector. Mount and tighten screws ❶.

Guideline

Remaining screws, chassis	M6	10 Nm (7.4 lbf ft)

– Position brake line, wiring harness, and clamp. Mount and tighten screws ❷.
– Position the right fork protector. Mount and tighten screws ❶.

Guideline

Remaining screws, chassis	M6	10 Nm (7.4 lbf ft)

12.10 Removing the seat

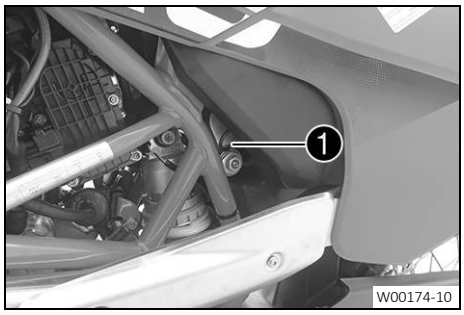

– Pull on loop ❶ and raise the rear of the seat.
– Pull the seat back and lift it off.

12.11 Mounting the seat

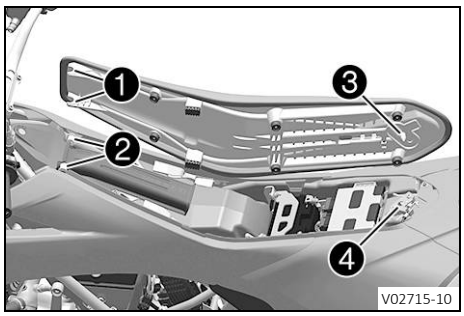

– Hook the seat using holding lugs ❶ on to bushings ❷, lower the seat at the rear and push it forward.
– Push locking pin ❸ into lock housing ❹ and push the back of the seat down until the locking pin locks in place with an audible click.
– Check that the seat is correctly mounted.

12.12 Removing the tool set

Preparatory work

– Remove the seat. (📖 p. 53)

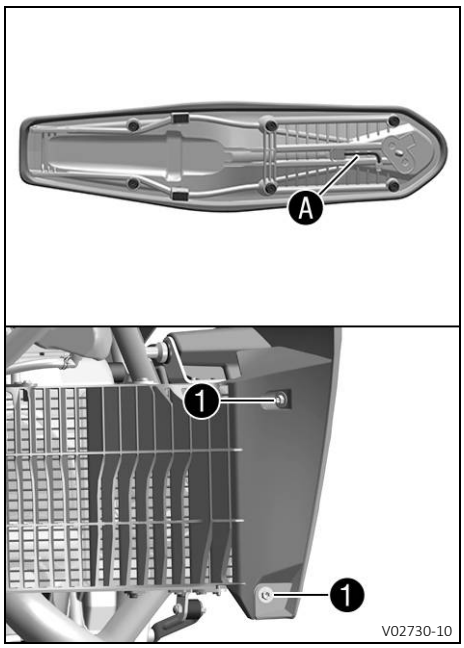

Main work

– Take the hexagon socket wrench for loosening and mounting screws ❶ from bracket Ⓐ on the underside of the seat.
– Remove screws ❶.
– Take off the left side cover.

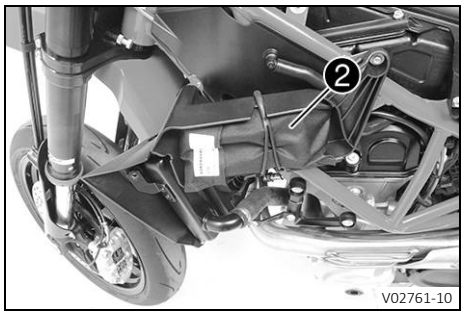

– Open the tool set compartment and take out tool set ❷.

12.13 Storing the tool set

Preparatory work

– Remove the seat. (📖 p. 53)

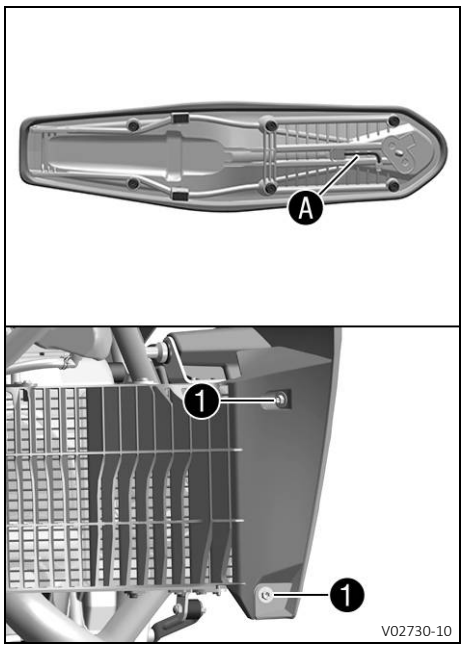

Main work

– Remove screws ❶.

> **Info**
> A tool for removing and mounting these screws is located in holder Ⓐ on the underside of the seat.

– Take off the left side cover.

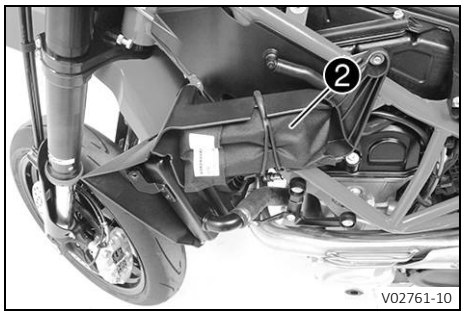

– Open the tool set compartment and store tool set ❷.
– Close the tool set compartment.
– Position the left side cover.
– Mount and tighten screws ❶.
  Guideline

Screw, radiator shield	M6x20	4.5 Nm (3.32 lbf ft)

– Make sure the tool is reinserted in holder Ⓐ.

Finishing work

– Mount the seat. (📖 p. 53)

12.14 Take off the side cover

Preparatory work

– Remove the seat. (📖 p. 53)

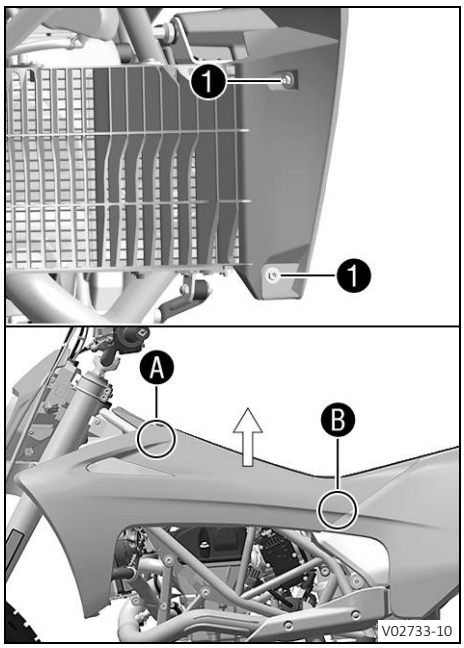

Main work

- Remove screws ❶.
- Pull the left side cover out from the rubber bushing in area Ⓐ.
- Pull off the left side cover upwards from the special screw in area Ⓑ.
- Take off the left side cover from upwards.
- Repeat these steps on the opposite side.

12.15 Mounting side cover

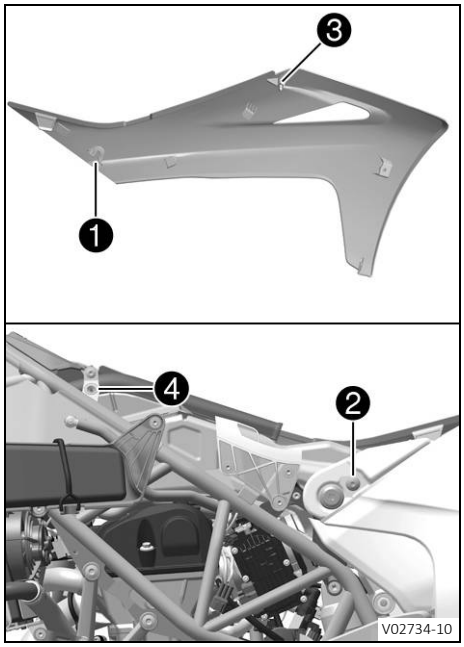

Main work

- Position the left side cover with holding lug ❶ on special screw ❷ and push downwards.
- Press the left side cover into rubber bushing ❹ with pin ❸.

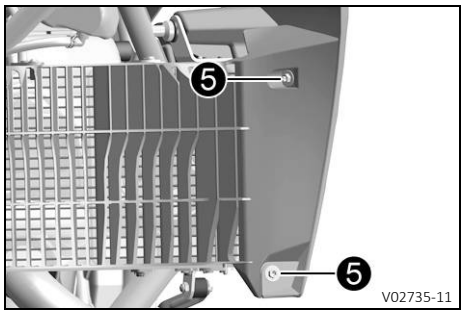

- Mount and tighten screws ❺.

  Guideline

Screw, radiator shield	M6x20	4.5 Nm (3.32 lbf ft)

- Repeat these steps on the opposite side.

Finishing work

– Mount the seat. (p. 53)

12.16 Removing the front fender

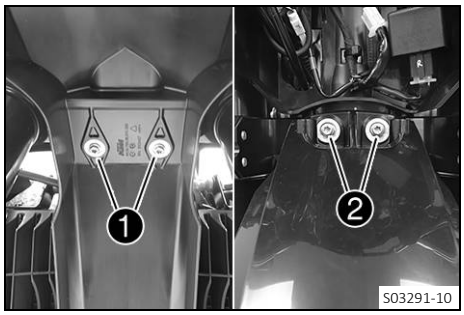

Preparatory work

– Remove the headlight mask with the headlight. (p. 88)

Main work

– Remove screws ❶.

– Remove screws ❷ and take off the fender.

12.17 Installing the front fender

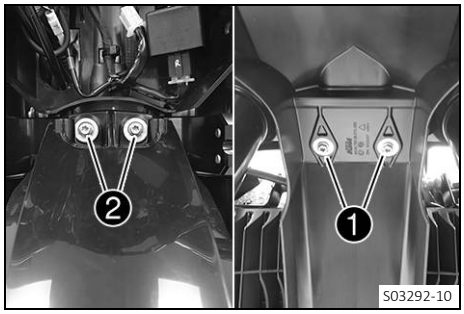

Main work

– Position the front fender. Mount and tighten screws ❶.

Guideline

Remaining screws, chassis	M6	10 Nm (7.4 lbf ft)

– Mount and tighten screws ❷.

Guideline

Remaining screws, chassis	M6	10 Nm (7.4 lbf ft)

Finishing work

– Install the headlight mask with the headlight. (p. 88)

– Check the headlight setting. (p. 91)

12.18 Removing the air filter

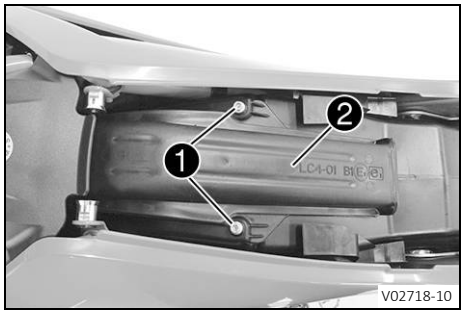

Preparatory work

– Remove the seat. (p. 53)

Main work

– Remove screws ❶.

– Remove the upper part of the air filter box ❷.

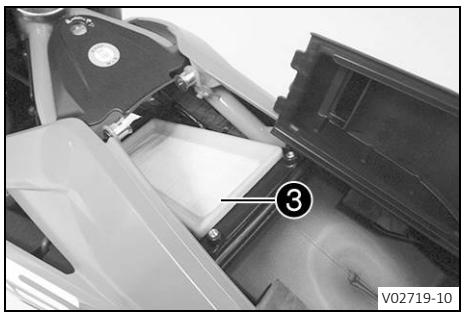

Note

Engine damage Unfiltered intake air has a negative effect on the service life of the engine.

Dust and dirt will enter the engine without an air filter.

– Only operate the vehicle if it is equipped with an air filter.

– Remove air filter ❸.

12.19 Installing the air filter

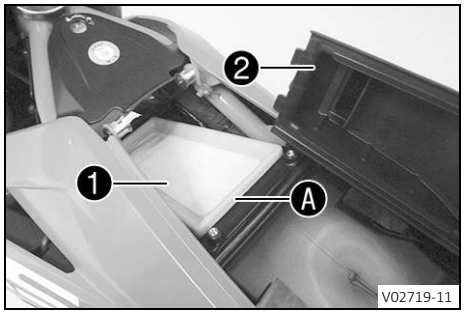

Main work

– Clean the air filter box.

– Mount air filter ❶.

Info

The air filter must lie flush against the air filter box along the entire sealing surface Ⓐ.
If the air filter is not mounted correctly, dust and dirt may enter the engine and result in damage.

– Hook air filter box top ❷ into the front of the air filter box and swing down.

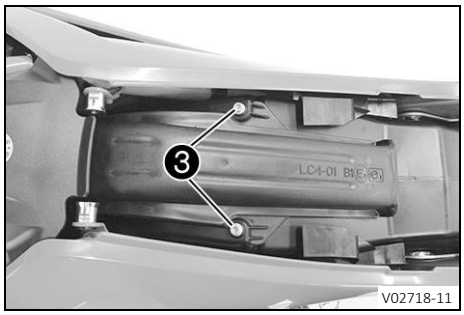

– Mount and tighten screws ❸.

Guideline

Screw, upper part of the air filter box	M6	2 Nm (1.5 lbf ft)

Finishing work

– Mount the seat. (p. 53)

12.20 Checking the chain for dirt

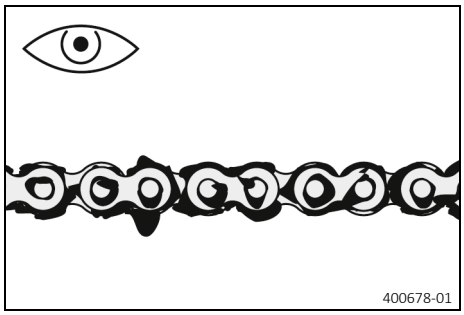

– Check the chain for heavy soiling.

» If the chain is very dirty:

– Clean the chain. (p. 59)

12.21 Cleaning the chain

Warning

Danger of accidents Lubricants on the tires reduces the road grip.

– Remove lubricants from the tires using a suitable cleaning agent.

Warning

Danger of accidents Oil or grease on the brake discs reduces the braking effect.

– Always keep the brake discs free of oil and grease.
– Clean the brake discs with brake cleaner when necessary.

Note

Environmental hazard Hazardous substances cause environmental damage.

– Dispose of oils, grease, filters, fuel, cleaning agents, brake fluid, etc., correctly and in compliance with the applicable regulations.

Info

The service life of the chain depends largely on its maintenance.

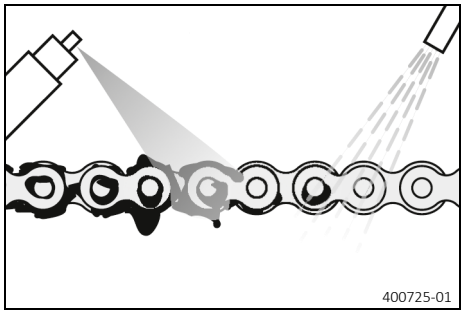

Preparatory work

– Raise the motorcycle with the rear lifting gear. (p. 50)

Main work

– Rinse off loose dirt with a soft jet of water.
– Remove old grease residue with chain cleaner.

Chain cleaner (p. 124)

– After drying, apply chain spray.

Street chain spray (p. 124)

Finishing work

– Remove the rear of the motorcycle from the wheel stand. (p. 51)

12.22 Checking the chain tension

Warning

Danger of accidents Incorrect chain tension damages components and results in accidents.

If the chain is tensioned too much, the chain, engine sprocket, rear sprocket, transmission and rear wheel bearings wear more quickly. Some components may break if overloaded.

If the chain is too loose, the chain may fall off the engine sprocket or the rear sprocket. As a result, the rear wheel locks or the engine will be damaged.

– Check the chain tension regularly.
– Set the chain tension in accordance with the specification.

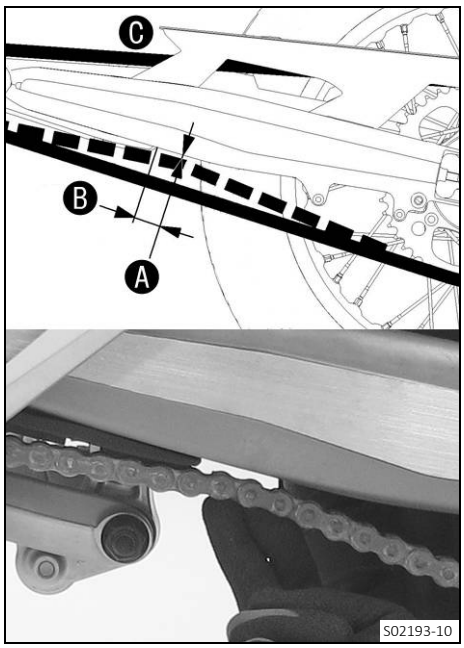

– Raise the motorcycle with the rear lifting gear. (p. 50)

Info
The check is also possible when the motorcycle is resting on the side stand.

– Shift the transmission to neutral position.
– Push the chain upward at a distance B from the chain sliding guard and determine chain tension A.

Info
The top part of chain C must be taut.
Chain wear is not always even. Repeat this measurement at different chain positions.

Chain tension	5 mm (0.2 in)

Distance to chain sliding guard	30 mm (1.18 in)

» If the chain tension does not meet the specification:
  – Adjust the chain tension. (p. 60)
– Remove the rear of the motorcycle from the wheel stand. (p. 51)

12.23 Adjusting the chain tension

Warning
Danger of accidents Incorrect chain tension damages components and results in accidents.

If the chain is tensioned too much, the chain, engine sprocket, rear sprocket, transmission and rear wheel bearings wear more quickly. Some components may break if overloaded.

If the chain is too loose, the chain may fall off the engine sprocket or the rear sprocket. As a result, the rear wheel locks or the engine will be damaged.

– Check the chain tension regularly.
– Set the chain tension in accordance with the specification.

Preparatory work
– Check the chain tension. (p. 59)

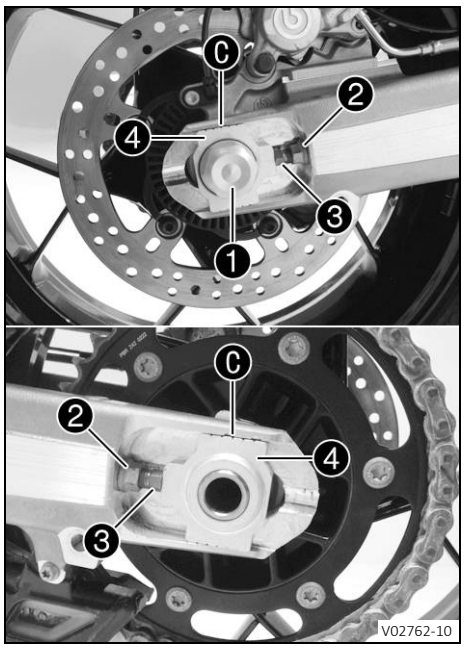

Main work

- Loosen nut ❶.
- Loosen nuts ❷.
- Adjust the chain tension by turning adjusting screws ❸ left and right.

  Guideline

Chain tension	5 mm (0.2 in)
Turn the adjusting screws ❸ on the left and right so that the markings on the left and right chain adjusters ❹ are in the same position relative to the reference marks Ⓒ. The rear wheel is then correctly aligned.	

Info
The top chain section must be taut.
Chain wear is not always even. Repeat this measurement at different chain positions.

- Tighten nuts ❷.
- Make sure that chain adjusters ❹ are fitted correctly on adjusting screws ❸.
- Tighten nut ❶.

  Guideline

Nut, rear wheel spindle	M25x1.5	90 Nm (66.4 lbf ft)

12.24 Checking the chain, rear sprocket, engine sprocket, and chain guide

Preparatory work

- Raise the motorcycle with the rear lifting gear. (📖 p. 50)

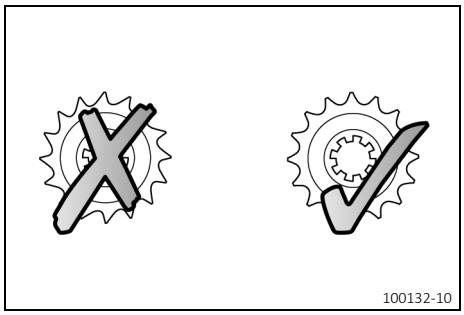

Main work

- Shift the transmission into neutral.
- Check the chain, rear sprocket, and engine sprocket for wear.
  - » If the chain, rear sprocket or engine sprocket is worn:
    - Change the drivetrain kit. 🔧

Info
The engine sprocket, rear sprocket, and chain should always be replaced together.

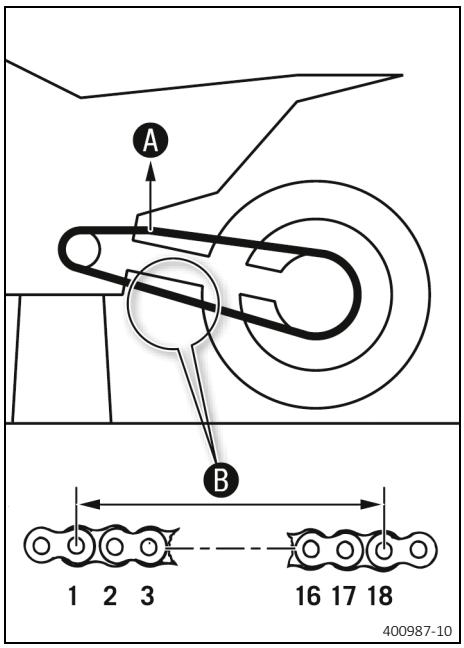

– Pull on the top section of the chain with the specified weight A.

Guideline

Weight of chain wear measurement	15 kg (33 lb.)

– Measure distance B of 18 chain rollers in the lower chain section.

Info
Chain wear is not always even, so you should repeat this measurement at different chain positions.

Maximum distance B from 18 chain rollers at the longest chain section	272 mm (10.71 in)

» If distance B is greater than the specified measurement:
  – Change the drivetrain kit.

Info
When a new chain is mounted, the rear sprocket and engine sprocket should also be changed. New chains wear out faster on an old, worn rear sprocket or engine sprocket.

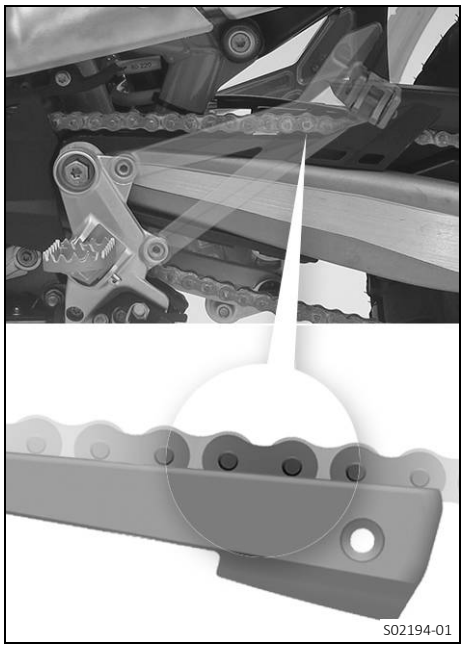

– Check the chain sliding guard for wear.
  » If the lower edge of the chain pins is in line with, or below, the chain sliding guard:
    – Replace the chain sliding guard.
– Check that the chain sliding guard is firmly seated.
  » If the chain sliding guard is loose:
    – Tighten screws on the chain sliding guard.

Guideline

Screw, chain sliding guard	M6	10 Nm (7.4 lbf ft) **Loctite®243™**

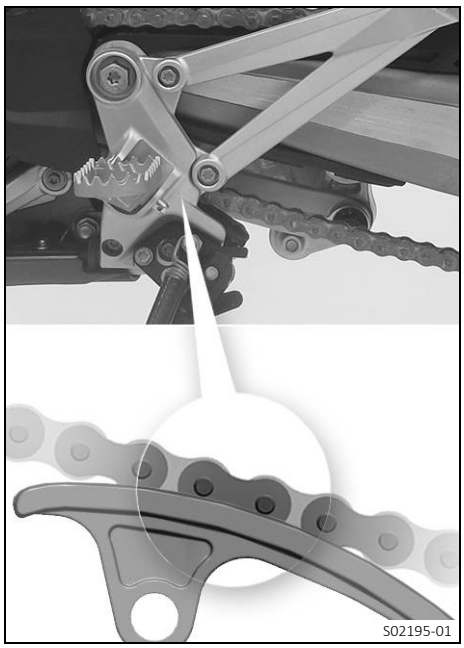

– Check the chain sliding piece for wear.
  » If the lower edge of the chain pins is in line with or below the chain sliding piece:
    – Change the chain sliding piece. 🔧
– Check that the chain sliding piece is firmly seated.
  » If the chain sliding piece is loose:
    – Tighten screw on the chain sliding piece.

    Guideline

Screw, chain sliding piece	M8	15 Nm (11.1 lbf ft) **Loctite®243™**

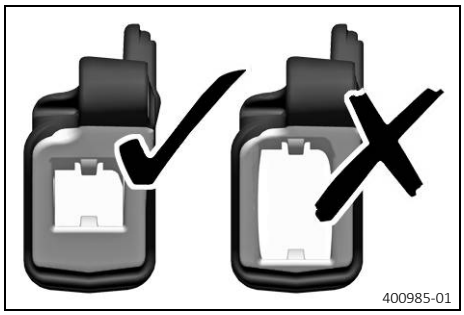

– Check the chain guide for wear.

Info
Wear can be seen on the front of the chain guide.

  » If the light part of the chain guide is worn:
    – Change the chain guide. 🔧

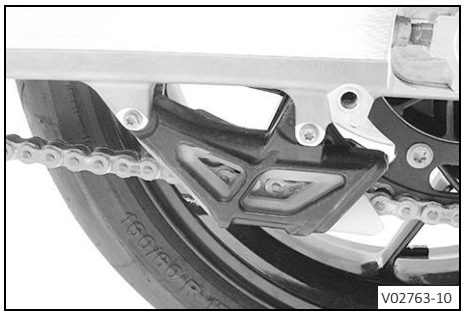

– Check that the chain guide is firmly seated.
  » If the chain guide is loose:
    – Tighten the screws on the chain guide.

    Guideline

Remaining screws, chassis	M6	10 Nm (7.4 lbf ft)

Finishing work

– Remove the rear of the motorcycle from the wheel stand. (📖 p. 51)

12.25 Adjusting chain guide

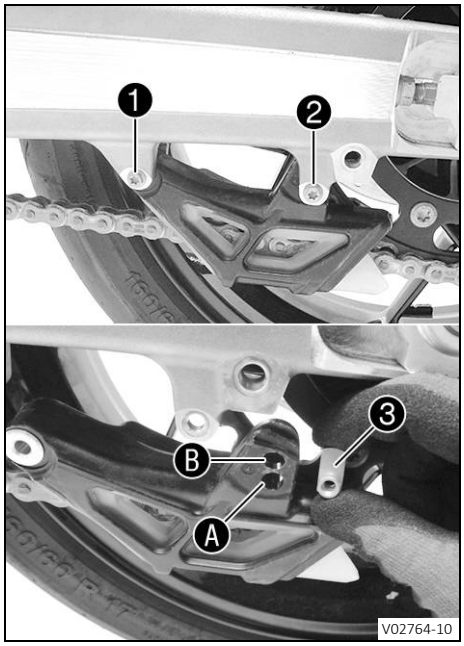

– Remove screws 1 and 2. Take off the chain guide.

Condition

Number of teeth: ≤ 44 teeth

– Insert nut 3 in hole A. Position the chain guide.

– Mount and tighten screws 1 and 2.

Guideline

Screw, chain guide	M6	10 Nm (7.4 lbf ft)

Condition

Number of teeth: ≥ 45 teeth

– Insert nut 3 in hole B. Position the chain guide.

– Mount and tighten screws 1 and 2.

Guideline

Screw, chain guide	M6	10 Nm (7.4 lbf ft)

12.26 Checking the rubber grip

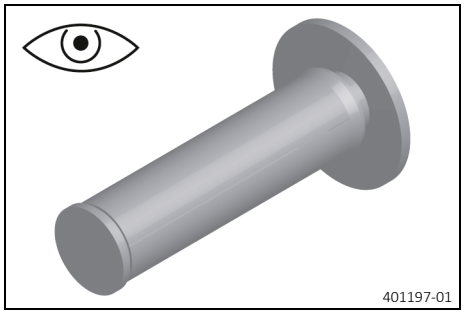

– Check the rubber grips on the handlebar for damage, wear, and looseness.

Info

The rubber grips are vulcanized onto a sleeve on the left and onto the handle tube of the throttle grip on the right. The left sleeve is clamped onto the handlebar.
The rubber grip can only be replaced with the sleeve or the throttle tube.

» If a rubber grip is damaged or worn:

– Change the rubber grip.

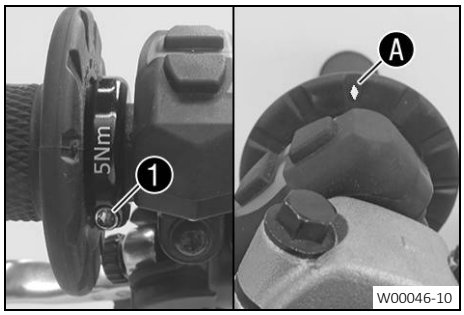

– Check that screw 1 is firmly seated.

Guideline

Screw, fixed grip	M4	5 Nm (3.7 lbf ft) **Loctite®243™**

Diamond A must be located at the top.

12.27 Adjusting the basic position of the clutch lever

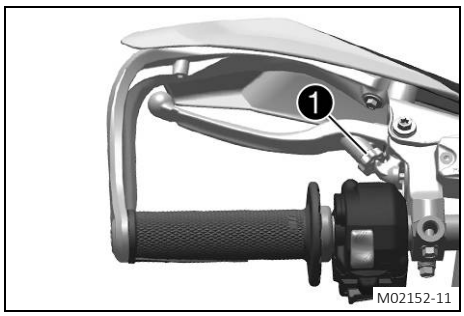

– Adjust basic position of the clutch lever to your hand size by turning adjusting screw ❶.

Info
Do not make any adjustments while riding.
Push the clutch lever forward and turn the adjusting wheel.
The range of adjustment is limited.
Only turn the adjusting screw by hand, and do not use force.

– When adjusting the clutch lever, make sure to leave a minimum clearance to other parts of the vehicle.

Guideline

Minimum clearance	5 mm (0.2 in)

12.28 Checking/correcting the fluid level of hydraulic clutch

Warning
Skin irritation Brake fluid is a harmful substance.
– Keep brake fluid out of the reach of children.
– Wear suitable protective clothing and safety glasses.
– Do not allow brake fluid to come into contact with the skin, the eyes or clothing.
– Consult a doctor immediately if brake fluid has been swallowed.
– Rinse the affected area with plenty of water in the event of contact with the skin.
– Rinse eyes thoroughly with water immediately and consult a doctor if brake fluid comes into contact with the eyes.
– If brake fluid spills on to your clothing, change the clothing.

Note
Environmental hazard Hazardous substances cause environmental damage.
– Dispose of oils, grease, filters, fuel, cleaning agents, brake fluid, etc., correctly and in compliance with the applicable regulations.

Info
The fluid level rises with increasing wear of the clutch facing discs.
Avoid contact between brake fluid and painted parts. Brake fluid corrodes paint.

– Move the hydraulic clutch fluid reservoir mounted on the handlebar into a horizontal position.

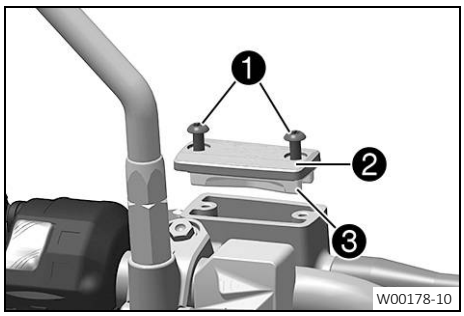

– Remove screws ❶.
– Take off cover ❷ with membrane ❸.
– Check the fluid level.

Fluid level below container rim	5 mm (0.2 in)

» If the fluid level does not meet specifications:
  – Correct the fluid level of the hydraulic clutch.

Brake fluid DOT 4 / DOT 5.1 (📖 p. 122)

– Position the cover with the membrane. Mount and tighten the screws.

Info
Use water to immediately clean up any brake fluid that has overflowed or spilled.

13.1 Anti-lock braking system (ABS)

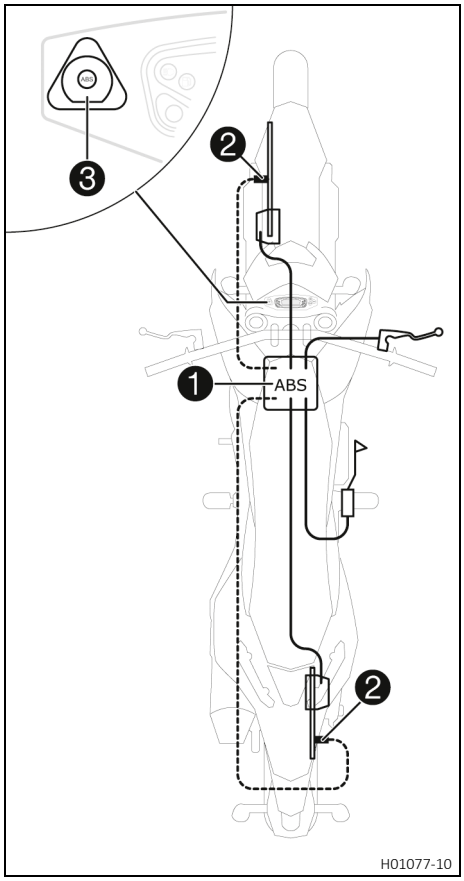

The ABS module ❶, consisting of a hydraulic unit, an ABS control unit, and a return pump, is located under the seat. One wheel speed sensor ❷ is located in each case on the front and the rear wheel.

Warning

Danger of accidents Changes to the vehicle impair the function of the ABS.

- Do not make any changes to the suspension travel.
- Only use spare parts on the brake system which have been approved and recommended by GASGAS.
- Only use tires/wheels approved by GASGAS with the corresponding speed index.
- Maintain the specified tire pressure.
- Ensure that service work and repairs are performed professionally. (Your authorized GASGAS Motorcycles workshop will be glad to help.)

ABS is a safety system that prevents locking of the wheels when driving straight ahead without the influence of lateral forces.

Warning

Danger of accidents Driving aids can reduce the probability of a fall only within physical limits.

It is not always possible to compensate for certain riding situations, for example with luggage loaded with a high center of gravity, varying road surfaces, steep descents or full braking without disengaging the gear.

- Adapt your riding style to the road conditions and your driving ability.

Warning

Danger of accidents An incorrectly selected ABS mode makes control of the vehicle considerably more difficult.

The ABS modes are each only suitable for certain conditions.

- Always select an ABS mode that is compatible with the surface of the ground.

The ABS operates with two independent brake circuits (front and rear brakes). When the ABS control unit detects a locking tendency in a wheel, ABS begins regulating the brake pressure. The control function causes a slight pulsing of the hand and foot brake levers.

The ABS warning lamp ❸ must light up after the ignition is switched on and go out after starting off. If it does not go out after starting off or if it lights up while riding, this indicates a fault in the ABS. In this case, the ABS is no longer enabled and the wheels may lock during braking. The brake system itself stays functional; only ABS control is not available.

The ABS warning lamp may also light up if the rotating speeds of the front and rear wheels differ greatly under extreme riding conditions, for example when making "wheelies" or if the rear wheel spins. This causes the ABS to switch off.

To reactivate the ABS, stop the vehicle and switch off the ignition. The ABS is reactivated when the vehicle is switched on again. The ABS warning lamp goes out when you start off.

Info
The motorcycle has an additional 5-D sensor. The 5-D sensor makes the ABS control dependent on the angle of inclination and pitch. This can prevent locking and slipping of the wheels during braking when the vehicle is inclined (riding in curves) within the physical limitations.

13.2 Adjusting the basic position of the hand brake lever

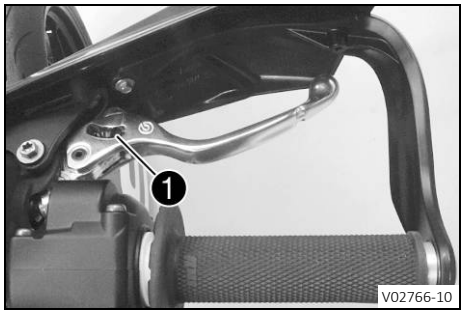

– Adjust the basic position of the hand brake lever to your hand size by turning adjusting wheel 1.

Info
Do not make any adjustments while riding.
Push the hand brake lever forward and turn the adjusting wheel.
The range of adjustment is limited.
Only turn the adjusting screw by hand, and do not use force.

– When adjusting the brake lever, maintain a minimum clearance to other parts of the vehicle.

Guideline

Minimum clearance	5 mm (0.2 in)

13.3 Checking the brake discs

Warning
Danger of accidents Worn-out brake discs reduce the braking effect.
– Make sure that worn-out brake discs are replaced immediately. (Your authorized GASGAS Motorcycles workshop will be glad to help.)

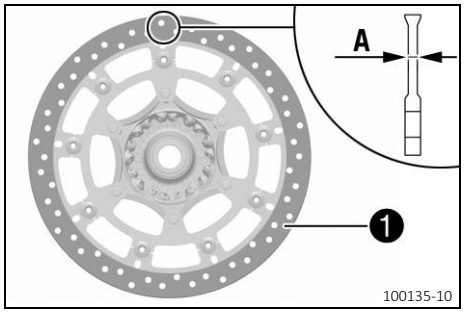

– Check the front and rear brake disc thickness at multiple points for the dimension A.

Info
Wear will reduce the thickness of the brake disc at contact surface 1 of the brake linings.

Brake discs - wear limit	
front	4.5 mm (0.177 in)
rear	4.5 mm (0.177 in)

» If the brake disc thickness is less than the specified value.
  – Change the brake disc.

– Check the front and rear brake discs for damage, cracking, and deformation.
  » If the brake disc exhibits damage, cracking, or deformation:
    – Change the brake disc.

13.4 Checking the front brake fluid level

Warning

Danger of accidents An insufficient brake fluid level will cause the brake system to fail.

If the brake fluid level drops below the specified marking or the specified value, the brake system is leaking or the brake linings are worn down.

– Check the brake system and do not continue riding until the problem is eliminated. (Your authorized GAS-GAS Motorcycles workshop will be glad to help.)

Warning

Danger of accidents Brake fluid which is too old or of the wrong type impairs the function of the brake system.

– Make sure that brake fluid for the front and rear brake is changed in accordance with the service schedule. (Your authorized GASGAS Motorcycles workshop will be glad to help.)
– Make sure that only clean, approved brake fluid from a tightly sealed container is used. (Your authorized GAS-GAS Motorcycles workshop will be glad to help.)

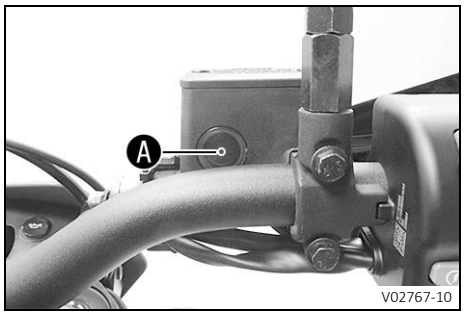

– Move the brake fluid reservoir mounted on the handlebar to a horizontal position.
– Check the brake fluid level in the level viewer.
  » If the brake fluid level has dropped below the marking A:
    – Add front brake fluid. (p. 69)

13.5 Adding front brake fluid

Warning

Danger of accidents An insufficient brake fluid level will cause the brake system to fail.

If the brake fluid level drops below the specified marking or the specified value, the brake system is leaking or the brake linings are worn down.

– Check the brake system and do not continue riding until the problem is eliminated. (Your authorized GAS-GAS Motorcycles workshop will be glad to help.)

Warning

Skin irritation Brake fluid is a harmful substance.

– Keep brake fluid out of the reach of children.
– Wear suitable protective clothing and safety glasses.
– Do not allow brake fluid to come into contact with the skin, the eyes or clothing.
– Consult a doctor immediately if brake fluid has been swallowed.
– Rinse the affected area with plenty of water in the event of contact with the skin.
– Rinse eyes thoroughly with water immediately and consult a doctor if brake fluid comes into contact with the eyes.
– If brake fluid spills on to your clothing, change the clothing.

Warning

Danger of accidents Brake fluid which is too old or of the wrong type impairs the function of the brake system.

– Make sure that brake fluid for the front and rear brake is changed in accordance with the service schedule. (Your authorized GASGAS Motorcycles workshop will be glad to help.)
– Make sure that only clean, approved brake fluid from a tightly sealed container is used. (Your authorized GASGAS Motorcycles workshop will be glad to help.)

Note

Environmental hazard Hazardous substances cause environmental damage.

– Dispose of oils, grease, filters, fuel, cleaning agents, brake fluid, etc., correctly and in compliance with the applicable regulations.

Info

Avoid contact between brake fluid and painted parts. Brake fluid corrodes paint.

Preparatory work

– Check that the brake linings of the front brake are secured. (p. 70)

Main work

– Move the brake fluid reservoir mounted on the handlebar to a horizontal position.

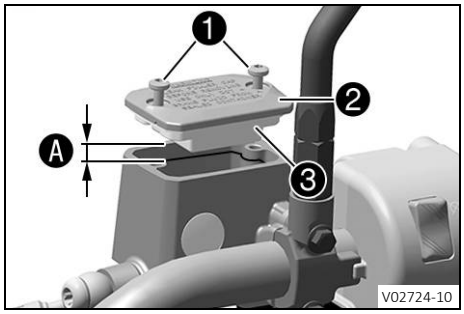

– Remove screws 1.
– Take off cover 2 with membrane 3.
– Add brake fluid to level A.

Guideline

Level A (brake fluid level below reservoir rim)	5 mm (0.2 in)

Brake fluid DOT 4 / DOT 5.1 (p. 122)

– Position the cover with the membrane. Mount and tighten the screws.

Info

Use water to immediately clean up any brake fluid that has overflowed or spilled.

13.6 Checking that the brake linings of the front brake are secured

Warning

Danger of accidents Worn-out brake linings reduce the braking effect.

– Ensure that worn-out brake linings are replaced immediately. (Your authorized GASGAS Motorcycles workshop will be glad to help.)

Warning

Danger of accidents Damaged brake discs reduce the braking effect.

If the brake linings are not changed in time, the brake lining carriers grind against the brake disc. As a consequence, the braking effect is greatly reduced and the brake discs are destroyed.

– Check the brake linings regularly.

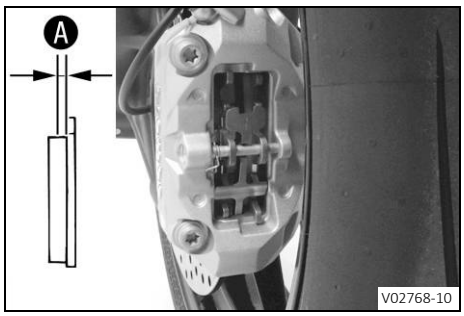

– Check the brake linings for lining thickness A.

Minimum thickness A	≥ 1 mm (≥ 0.04 in)

» If it is less than the minimum thickness:
  – Change the brake linings of the front brake.
– Check the brake linings for damage and cracking.
» If there is damage or cracking:
  – Change the brake linings of the front brake.
– Check that the brake linings are secured.
» If the brake linings are not secured correctly:
  – Secure brake linings, replace with new parts if necessary.

13.7 Checking the free travel of foot brake lever

Warning

Danger of accidents The brake system will fail if it overheats or is adjusted incorrectly.

If there is no free travel on the foot brake lever, pressure builds up in the brake system on the rear brake.

– Set the free travel on the foot brake lever in accordance with the specification.
– Ensure that the adjustment steps are performed properly. (Your authorized GASGAS Motorcycles workshop will be glad to help.)

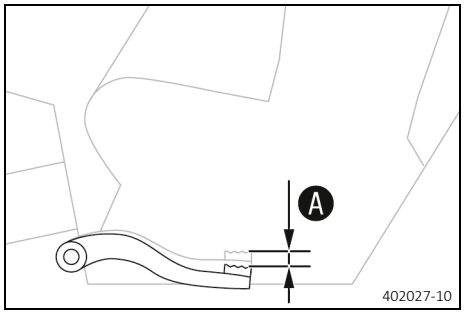

– Move the foot brake lever back and forth between the end stop and the contact to the foot brake cylinder piston and check free travel A.

Guideline

Free travel at foot brake lever	3 … 5 mm (0.12 … 0.2 in)

Info

You will know that contact has been made with the foot brake cylinder piston when there is increased resistance when you activate the foot brake lever.

» If the free travel does not meet specifications:
  – Adjust the basic position of the foot brake lever. (p. 71)

13.8 Adjusting the basic position of the foot brake lever

Warning

Danger of accidents The brake system will fail if it overheats or is adjusted incorrectly.

If there is no free travel on the foot brake lever, pressure builds up in the brake system on the rear brake.

– Set the free travel on the foot brake lever in accordance with the specification.
– Ensure that the adjustment steps are performed properly. (Your authorized GASGAS Motorcycles workshop will be glad to help.)

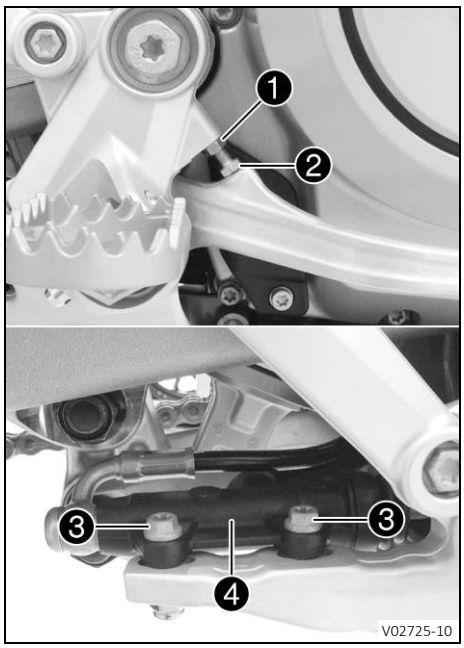

- Loosen fittings ❸ on rear brake cylinder ❹.
- To adjust the basic position of the foot brake lever to individual requirements, loosen nut ❶ and turn screw ❷ accordingly.

Info
The range of adjustment is limited. The screw must be screwed into the footrest bracket by at least four turns.

- Position rear brake cylinder ❹ so that the foot brake lever has the necessary free travel.
- Mount and tighten fittings ❸.

  Guideline

Fitting on rear brake cylinder	M6	10 Nm (7.4 lbf ft)

- Check the free travel of the foot brake lever. (📖 p. 71)
- Tighten nut ❶.

13.9 Checking the rear brake fluid level

Warning
Danger of accidents An insufficient brake fluid level will cause the brake system to fail.

If the brake fluid level drops below the **MIN** marking, the brake system is leaking or the brake linings are worn down.

- Check the brake system and do not continue riding until the problem is eliminated. (Your authorized GAS-GAS Motorcycles workshop will be glad to help.)

Warning
Danger of accidents Brake fluid which is too old or of the wrong type impairs the function of the brake system.

- Make sure that brake fluid for the front and rear brake is changed in accordance with the service schedule. (Your authorized GASGAS Motorcycles workshop will be glad to help.)
- Make sure that only clean, approved brake fluid from a tightly sealed container is used. (Your authorized GAS-GAS Motorcycles workshop will be glad to help.)

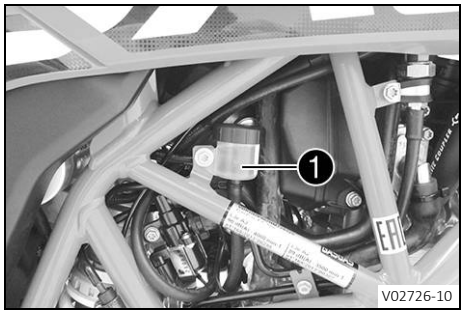

- Stand the vehicle upright.
- Check the brake fluid level in the brake fluid reservoir.
  - » If the fluid level reaches the **MIN** marking ❶:
    - Add rear brake fluid. 🔧 (📖 p. 73)

13.10 Adding rear brake fluid

Warning

Danger of accidents An insufficient brake fluid level will cause the brake system to fail.

If the brake fluid level drops below the **MIN** marking, the brake system is leaking or the brake linings are worn down.

– Check the brake system and do not continue riding until the problem is eliminated. (Your authorized GAS-GAS Motorcycles workshop will be glad to help.)

Warning

Skin irritation Brake fluid is a harmful substance.

– Keep brake fluid out of the reach of children.
– Wear suitable protective clothing and safety glasses.
– Do not allow brake fluid to come into contact with the skin, the eyes or clothing.
– Consult a doctor immediately if brake fluid has been swallowed.
– Rinse the affected area with plenty of water in the event of contact with the skin.
– Rinse eyes thoroughly with water immediately and consult a doctor if brake fluid comes into contact with the eyes.
– If brake fluid spills on to your clothing, change the clothing.

Warning

Danger of accidents Brake fluid which is too old or of the wrong type impairs the function of the brake system.

– Make sure that brake fluid for the front and rear brake is changed in accordance with the service schedule. (Your authorized GASGAS Motorcycles workshop will be glad to help.)
– Make sure that only clean, approved brake fluid from a tightly sealed container is used. (Your authorized GAS-GAS Motorcycles workshop will be glad to help.)

Note

Environmental hazard Hazardous substances cause environmental damage.

– Dispose of oils, grease, filters, fuel, cleaning agents, brake fluid, etc., correctly and in compliance with the applicable regulations.

Info

Avoid contact between brake fluid and painted parts. Brake fluid corrodes paint.

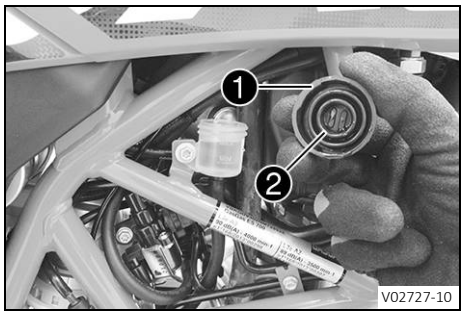

Preparatory work

– Check that the brake linings of the rear brake are secured. (p. 74)

Main work

– Stand the vehicle upright.
– Remove screw cap 1 with the washer and membrane 2.
– Add brake fluid up to the **MAX** marking.

Brake fluid DOT 4 / DOT 5.1 (p. 122)

– Mount the screw cover with washer and the membrane.

Info

Use water to immediately clean up any brake fluid that has overflowed or spilled.

13.11 Checking that the brake linings of the rear brake are secured

Warning

Danger of accidents Worn-out brake linings reduce the braking effect.

– Ensure that worn-out brake linings are replaced immediately. (Your authorized GASGAS Motorcycles workshop will be glad to help.)

Warning

Danger of accidents Damaged brake discs reduce the braking effect.

If the brake linings are not changed in time, the brake lining carriers grind against the brake disc. As a consequence, the braking effect is greatly reduced and the brake discs are destroyed.

– Check the brake linings regularly.

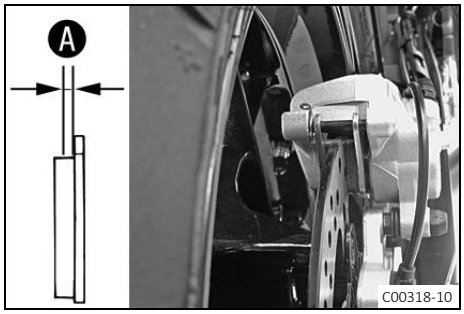

– Check the brake linings for lining thickness A.

Minimum thickness A	≥ 1 mm (≥ 0.04 in)

» If it is less than the minimum thickness:

– Change the rear brake linings.

– Check the brake linings for damage and cracking.

» If there is damage or cracking:

– Change the rear brake linings.

– Check that the brake linings are secured.

» If the brake linings are not secured correctly:

– Secure brake linings, replace with new parts if necessary.

14.1 Removing the front wheel

Preparatory work

– Raise the motorcycle with the rear lifting gear. (p. 50)
– Lift the motorcycle with the front lifting gear. (p. 51)

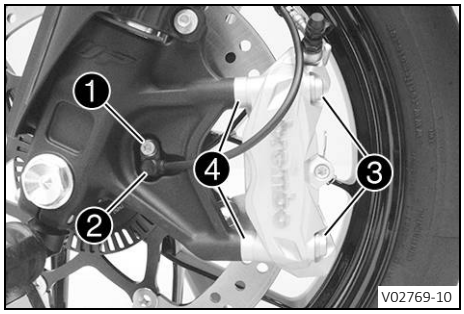

Main work

– Remove screw ❶ and pull wheel speed sensor ❷ out of the hole.
– Remove screws ❸ and spacers ❹.
– Press back the brake linings by slightly tilting the brake caliper laterally on the brake disc.
– Pull the brake caliper carefully back from the brake disc and hang to the side.

Info
Do not operate the hand brake lever if the brake caliper has been removed.

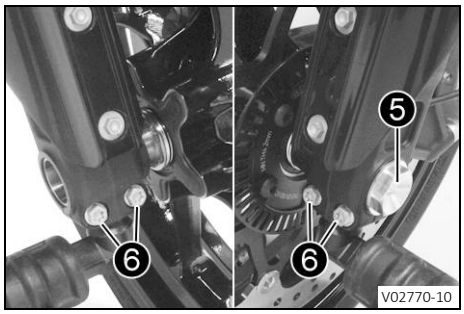

– Loosen screw ❺ by several rotations.
– Loosen screws ❻.
– Press on screw ❺ to push the wheel spindle out of the axle clamp.
– Remove screw ❺.

Warning
Danger of accidents Damaged brake discs reduce the braking effect.
– Always lay the wheel down in such a way that the brake disc is not damaged.

– Hold the front wheel and remove the wheel spindle. Take the front wheel out of the fork.

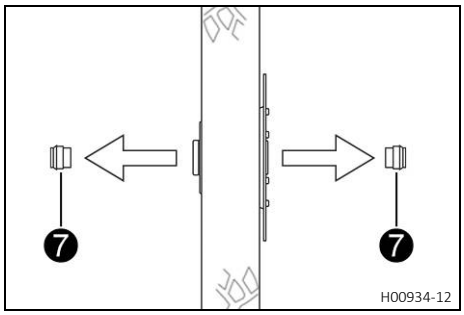

– Remove spacers ❼.

14.2 Installing the front wheel

Warning
Danger of accidents Oil or grease on the brake discs reduces the braking effect.
– Always keep the brake discs free of oil and grease.
– Clean the brake discs with brake cleaner when necessary.

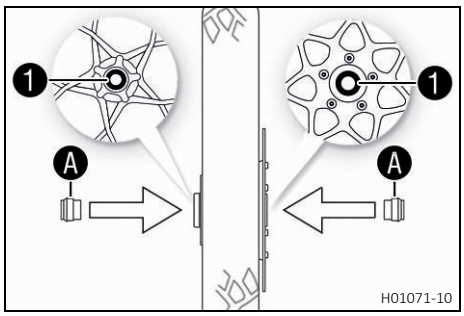

Main work

– Check the wheel bearing for damage and wear.
  » If the wheel bearing is damaged or worn:
    – Change front wheel bearing.
– Clean and grease shaft seal rings ❶ and contact surfaces Ⓐ of the spacers.

Long-life grease (📖 p. 124)

– Insert the spacers.

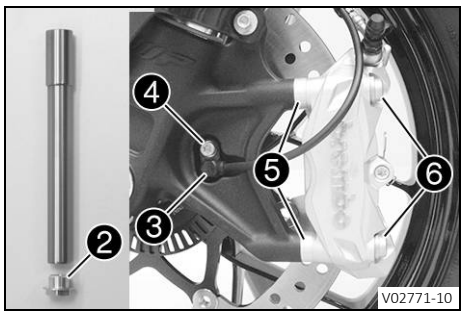

– Clean and grease the wheel spindle.

Long-life grease (📖 p. 124)

– Jack up the front wheel into the fork, position it, and insert the wheel spindle.
– Mount and tighten screw ❷.

Guideline

Screw, front wheel spindle	M24x1.5	45 Nm (33.2 lbf ft)

– Position wheel speed sensor ❸ in the hole.
– Mount and tighten screw ❹.

Guideline

Screw, wheel speed sensor	M6	6 Nm (4.4 lbf ft) **Loctite®243™**

– Position the brake caliper on the brake disc.
  ✔ The brake linings are correctly positioned.
– Position spacers ❺. Mount screws ❻, but do not tighten yet.

Guideline

Screw, front brake caliper	M10x1.25	45 Nm (33.2 lbf ft) **Loctite®243™**

– Operate the hand brake lever repeatedly until the brake linings are in contact with the brake disc and there is a pressure point. Secure the hand brake lever in the activated position.
  ✔ The brake caliper straightens.
– Tighten screws ❻.

Guideline

Screw, front brake caliper	M10x1.25	45 Nm (33.2 lbf ft) **Loctite®243™**

– Remove the locking piece of the hand brake lever.

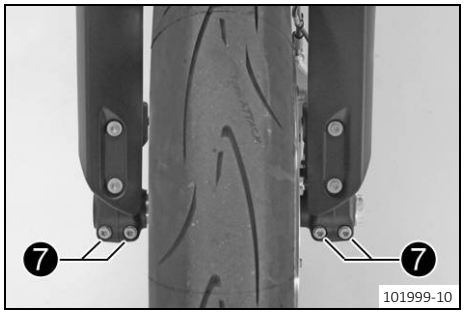

– Take the motorcycle off the front lifting gear. (📖 p. 51)
– Operate the front brake and compress the fork a few times firmly.
  ✔ The fork legs straighten.
– Tighten screws ❼.

Guideline

Screw, fork stub	M8	15 Nm (11.1 lbf ft)

Finishing work

– Remove the rear of the motorcycle from the wheel stand. (📖 p. 51)

14.3 Removing the rear wheel

Preparatory work

– Raise the motorcycle with the rear lifting gear. (📖 p. 50)

Main work

– Take the brake line out of the guide.

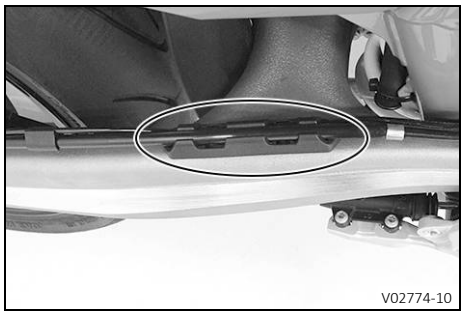

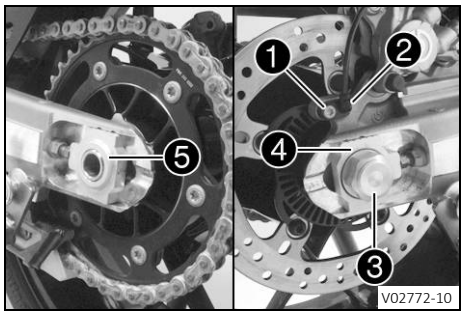

– Manually press the brake caliper toward the brake disc to push back the brake piston.
– Remove screw ❶ and pull wheel speed sensor ❷ out of the hole.
– Remove nut ❸. Take off chain adjuster ❹.
– Pull out wheel spindle ❺ to the point where the chain adjuster is no longer in contact with the adjusting screw.
– Push the rear wheel forward as far as possible and take the chain off the rear sprocket.

Info
Cover the components to protect them against damage.

– Hold the rear wheel and remove the wheel spindle.

Warning
Danger of accidents Damaged brake discs reduce the braking effect.
– Always lay the wheel down in such a way that the brake disc is not damaged.

– Take the rear wheel out of the link fork.

Info
Do not operate the foot brake when the rear wheel is removed.

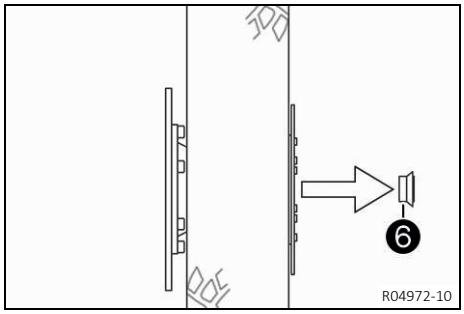

– Remove spacer ❻.

14.4 Installing the rear wheel

Warning

Danger of accidents Oil or grease on the brake discs reduces the braking effect.

– Always keep the brake discs free of oil and grease.
– Clean the brake discs with brake cleaner when necessary.

Warning

Danger of accidents There is no braking effect to start with at the rear brake after installing the rear wheel.

– Actuate the foot brake several times before going on a ride until you can feel a firm pressure point.

Main work

– Check the rear hub damping rubber pieces. (p. 79)
– Check the wheel bearing for damage and wear.
  » If the wheel bearing is damaged or worn:
    – Change the rear wheel bearing.

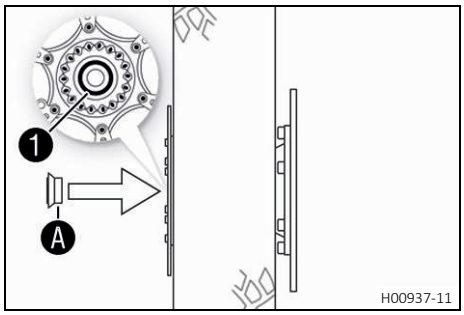

– Clean and grease shaft seal ring 1 and contact surface A of the spacer.

Long-life grease (p. 124)

– Insert a spacer.

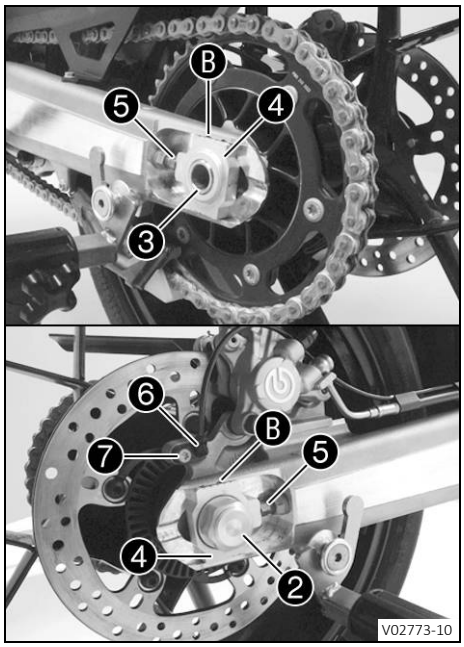

– Clean and grease the thread of the wheel spindle and nut 2.

Long-life grease (p. 124)

– Clean and grease the wheel spindle.

Long-life grease (p. 124)

– Mount the damping rubber and rear sprocket carrier in the rear wheel.
– Position the rear wheel.
  ✔ The brake linings are correctly positioned.
– Push the rear wheel forward as far as possible and lay the chain on the rear sprocket.
– Mount wheel spindle 3 and chain adjuster 4. Mount nut 2, but do not tighten yet.
– Make sure that chain adjusters 4 are fitted correctly on adjusting screws 5.

  Guideline

In order for the rear wheel to be correctly aligned, the markings on the left and right chain adjusters must be in the same position relative to reference markings B.

Info

Mount left and right chain adjusters 4 in the same position.

– Tighten nut 2.

  Guideline

Nut, rear wheel spindle	M25x1.5	90 Nm (66.4 lbf ft)

– Position wheel speed sensor 6 in the hole.

– Mount and tighten screw ❼.

Guideline

Screw, wheel speed sensor	M6	6 Nm (4.4 lbf ft) **Loctite®243™**

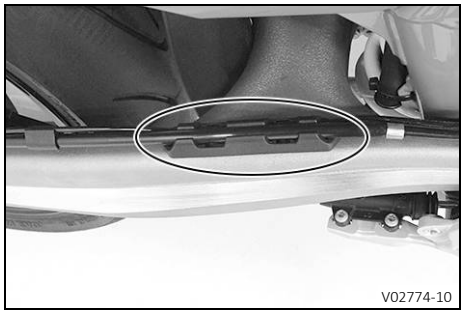

– Position the brake line in the guide.
– Operate the foot brake lever repeatedly until the brake linings are in contact with the brake disc and there is a pressure point.

Finishing work

– Remove the rear of the motorcycle from the wheel stand. (📖 p. 51)
– Check the chain tension. (📖 p. 59)

14.5 Checking the rear hub damping rubber pieces 🔧

Info

The engine power is transmitted from the rear sprocket to the rear wheel via the 6 damping rubber pieces. They eventually wear out during operation. If the damping rubber pieces are not changed in time, the rear sprocket carrier and the rear hub will be damaged.

Preparatory work

– Raise the motorcycle with the rear lifting gear. (📖 p. 50)
– Remove the rear wheel. 🔧 (📖 p. 77)

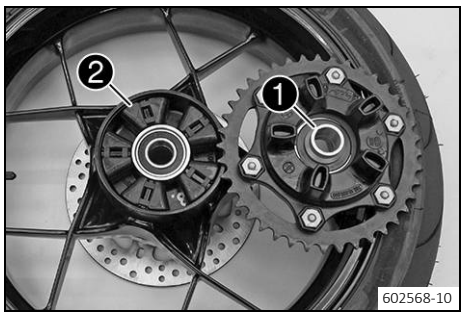

Main work

– Check bearing ❶.
  » If the bearing is damaged or worn:
    – Change the bearing of the rear sprocket carrier. 🔧
– Check damping rubber pieces ❷ of the rear hub for damage and wear.
  » If the damping rubber pieces of the rear hub are damaged or worn:
    – Change all the damping rubber pieces of the rear hub.

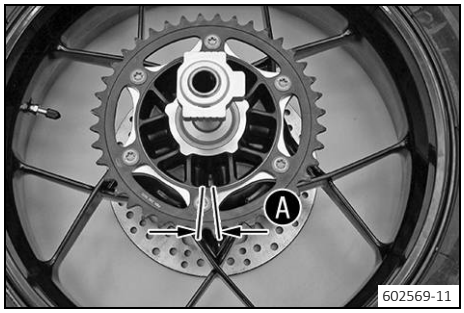

– Lay the rear wheel on a workbench with the rear sprocket facing upwards and insert the wheel spindle in the hub.
– To check play Ⓐ, hold the rear wheel tight and try to turn the rear sprocket with your hand.

Info

Measure the play on the outside of the rear sprocket.

Play of damping rubber pieces on rear wheel	≤ 5 mm (≤ 0.2 in)

» If clearance Ⓐ is larger than the specified value:
  – Change all the damping rubber pieces of the rear hub.

Finishing work

– Install the rear wheel. (p. 78)
– Remove the rear of the motorcycle from the wheel stand. (p. 51)
– Check the chain tension. (p. 59)

14.6 Checking the tire condition

Warning
Danger of accidents If a tire bursts while riding, the vehicle becomes uncontrollable.
– Ensure that damaged or worn tires are replaced immediately. (Your authorized GASGAS Motorcycles workshop will be glad to help.)

Warning
Danger of crashing Different tire tread patterns on the front and rear wheel impair the handling characteristic.
Different tire tread patterns can make the vehicle significantly more difficult to control.
– Make sure that only tires with a similar tire tread pattern are fitted to the front and rear wheel.

Warning
Danger of accidents Non-approved or non-recommended tires and wheels impact the handling characteristic.
– Only use tires/wheels approved by GASGAS with the corresponding speed index.

Warning
Danger of accidents New tires have reduced road grip.
The contact surface on new tires is not yet roughened.
– Run in new tires with moderate riding and only gradually increase the lean angle.
Run-in distance 200 km (124 mi)

Info
The type, condition, and pressure of the tires all have a major impact on the handling characteristic of the motorcycle.
Worn tires have a negative effect on handling characteristics, especially on wet surfaces.

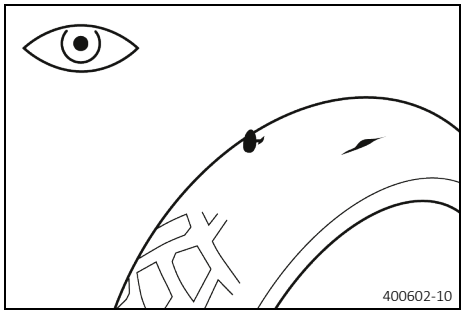

– Check the front and rear tires for cuts, embedded objects, and other damage.
  » If the tires have cuts, run-in objects, or other damage:
    – Change the tires.
– Check tread depth.

Info
Adhere to the legally required minimum tread depth.

Minimum tread depth	≥ 2 mm (≥ 0.08 in)

» If the tread depth is less than the minimum tread depth:
  – Change the tires.

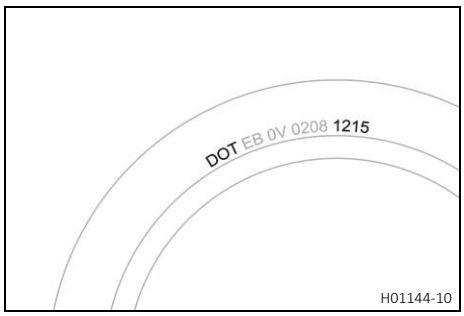

– Check the tire age.

Info
The tire date of manufacture is usually contained in the tire label and is indicated by the last four digits of the **DOT** number. The first two digits indicate the week of manufacture and the last two digits the year of manufacture.
GASGAS Motorcycles recommends that the tires be changed after five years at the latest, regardless of the actual wear.

» If the tires are more than five years old:
  – Change the tires.

14.7 Checking tire pressure

Info
Low tire pressure leads to abnormal wear and overheating of the tire.
Correct tire pressure ensures optimal riding comfort and maximum tire service life.

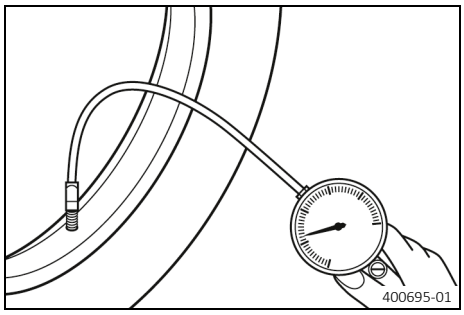

– Remove the protection cap.
– Check the tire pressure when the tires are cold.

Tire pressure when solo	
front	2.0 bar (29 psi)
rear	2.0 bar (29 psi)

Tire pressure with passenger / full payload	
front	2.2 bar (32 psi)
rear	2.2 bar (32 psi)

» If the tire pressure does not meet specifications:
  – Correct the tire pressure.
– Mount the protection cap.

14.8 Using tire repair spray

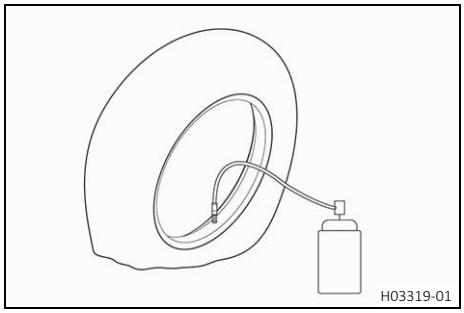

Warning
Danger of accidents Incorrect use of tire repair spray will result in the repaired tire losing pressure.

Tire repair spray cannot be used for all types of damage.

– Observe the instructions and specifications of the manufacturer of the tire repair spray.
– After repairing a tire with tire repair spray, ride slowly and carefully.
– Ride no further than to the nearest workshop and have the tire changed.

Tire repair spray should only be used in an emergency.
We recommend transporting the broken down vehicle to the nearest workshop instead of using tire repair spray.

15.1 Removing the 12-V battery

Warning

Risk of injury Battery acid and battery gases cause serious chemical burns.

- Keep 12 V batteries out of the reach of children.
- Wear suitable protective clothing and safety glasses.
- Avoid contact with battery acid and battery gases.
- Keep sparks or open flames away from the 12 V battery.
- Only charge 12 V batteries in well-ventilated rooms.
- Rinse the affected area immediately with plenty of water in the event of contact with the skin.
- Rinse eyes with water for at least 15 minutes and consult a doctor immediately if battery acid and battery gases get into the eyes.

Preparatory work

- Remove the seat. (p. 53)

Main work

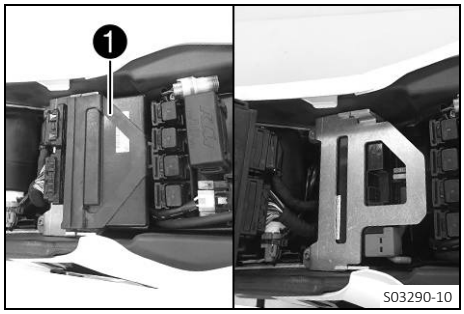

- Pull engine control unit 1 off the holder and set it to one side.

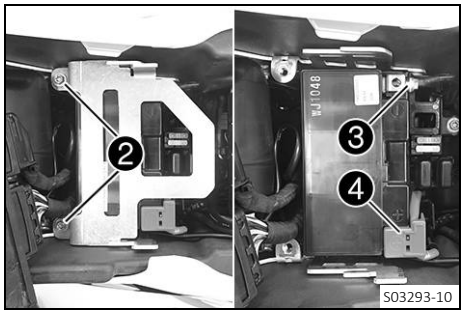

- Remove screws 2.
- Pull the retaining bracket forward and remove it.
- Disconnect negative cable 3 from the 12-V battery.
- Take off positive terminal cover 4.

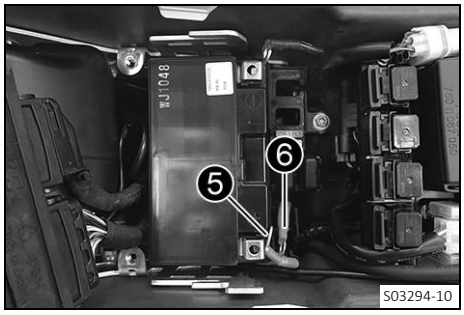

- Disconnect ABS connection cable 5 and positive cable 6 from the 12-V battery.
- Lift out the 12-V battery.

Info

Never operate the motorcycle with a discharged 12-V battery or without a 12-V battery. In both cases, electrical components and safety devices can be damaged. The vehicle will therefore no longer be roadworthy.

15.2 Installing the 12-V battery

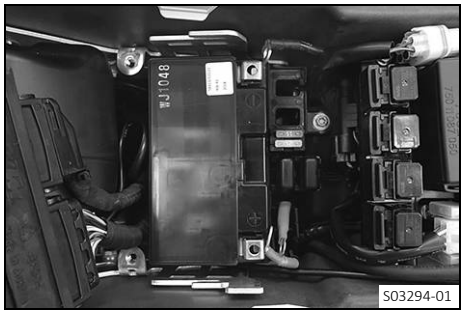

Main work

– Insert the 12-V battery into the battery compartment with the terminals facing to the rear.

12-V battery (YTZ10S) (p. 117)

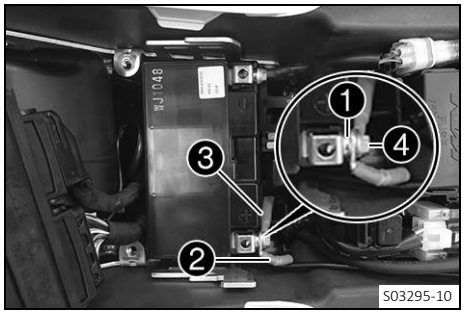

– Position washer ❶, positive cable ❷, and ABS connection cable ❸.

– Mount and tighten screw ❹.

Guideline

Screw, battery terminal	M6	4.5 Nm (3.32 lbf ft)

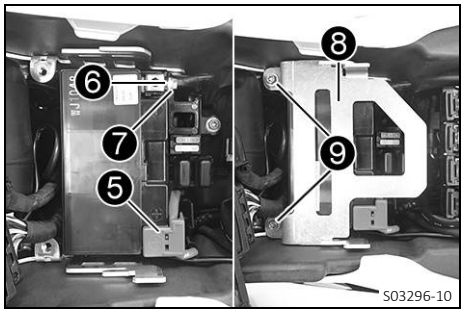

– Position positive terminal cover ❺.

– Position washer ❻ and negative cable ❼, and mount and tighten the screw.

Guideline

Screw, battery terminal	M6	4.5 Nm (3.32 lbf ft)

– Position retaining bracket ❽ and mount and tighten screws ❾.

Guideline

Remaining screws, chassis	M6	10 Nm (7.4 lbf ft)

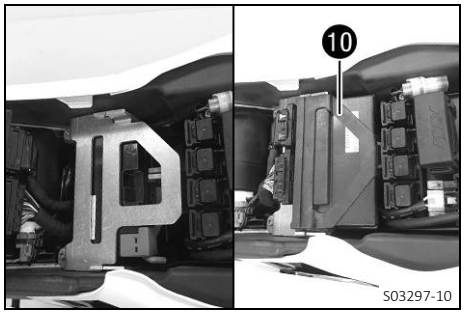

– Position engine control unit ❿.

Finishing work

– Mount the seat. (p. 53)

– Set the clock. (p. 27)

15.3 Charging the 12-V battery

Warning

Risk of injury Battery acid and battery gases cause serious chemical burns.

- Keep 12 V batteries out of the reach of children.
- Wear suitable protective clothing and safety glasses.
- Avoid contact with battery acid and battery gases.
- Keep sparks or open flames away from the 12 V battery.
- Only charge 12 V batteries in well-ventilated rooms.
- Rinse the affected area immediately with plenty of water in the event of contact with the skin.
- Rinse eyes with water for at least 15 minutes and consult a doctor immediately if battery acid and battery gases get into the eyes.

Note

Environmental hazard 12 V batteries contain environmentally hazardous materials.

- Do not dispose of 12 V batteries as household waste.
- Dispose of 12 V batteries at a collection point for used batteries.

Note

Environmental hazard Hazardous substances cause environmental damage.

- Dispose of oils, grease, filters, fuel, cleaning agents, brake fluid, etc., correctly and in compliance with the applicable regulations.

Info

Even when there is no load on the 12-V battery, it discharges steadily each day.
The charging level and the method of charging are very important for the service life of the 12-V battery.
Rapid recharging with a high charging current shortens the service life of the battery.
If the charging current, charging voltage, or charging time is exceeded, electrolyte escapes through the safety valves. This reduces the capacity of the 12-V battery.
If the 12-V battery is discharged by repeated starting, charge the 12-V battery immediately.
If the 12-V battery is left in a discharged state for an extended period, it will become deeply discharged and sulfating occurs, thus destroying the battery.
The 12-V battery is maintenance-free. The acid level does not have to be checked.

Preparatory work

- Remove the seat. (p. 53)
- Remove the 12-V battery. (p. 82)

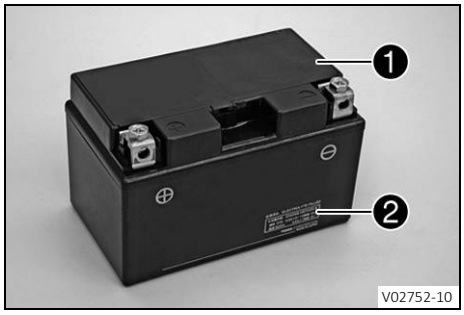

Main work

- Connect a battery charger to the 12-V battery. Switch on the battery charger.

  Guideline

The battery charger must be suitable for the 12-V battery.

  Info

  Never remove cover 1.
  Charge the 12-V battery to a maximum of 10% of the capacity specified on battery housing 2.

- Switch off the battery charger after charging and disconnect from the 12-V battery.

Guideline

The charging current, charging voltage, and charging time must not be exceeded.	
Recharge the 12-V battery regularly when the motorcycle is not being used	3 months

Finishing work

– Install the 12-V battery. (p. 83)
– Mount the seat. (p. 53)
– Set the clock. (p. 27)

15.4 Changing the main fuse

Warning

Fire hazard Incorrect fuses overload the electrical system.

– Only use fuses with the required ampere value.
– Do not bypass or repair fuses.

Info

The main fuse protects all electrical power consumers of the vehicle. It is in the housing of the starter relay next to the 12-V battery.

Preparatory work

– Remove the seat. (p. 53)

Main work

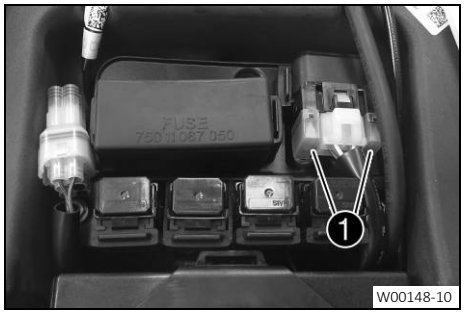

– Take off protection caps 1.

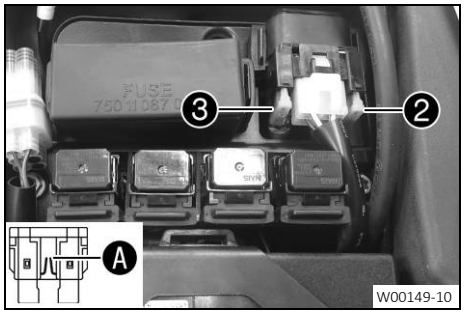

– Remove a defective main fuse 2 with needle nose pliers.

Info

A faulty fuse has a burned-out fuse wire A.

A spare fuse 3 is located in the starter relay.

– Insert a new main fuse.

Fuse (58011109130) (p. 117)

Info

Insert a new spare fuse into the starter relay to have it available when needed.

– Check that the electrical system is functioning properly.
– Mount the protection caps.

Finishing work

– Mount the seat. (p. 53)
– Set the clock. (p. 27)

15.5 Changing the ABS fuses

Warning

Fire hazard Incorrect fuses overload the electrical system.

– Only use fuses with the required ampere value.
– Do not bypass or repair fuses.

Info

Two fuses for the ABS are located under the seat. These fuses protect the return pump and the hydraulic unit of the ABS. The third fuse, which protects the ABS control unit, is located in the fuse box.

Preparatory work

– Remove the seat. (p. 53)
– Pull the engine control unit off the holder and set it to one side.
– Remove the retaining bracket.

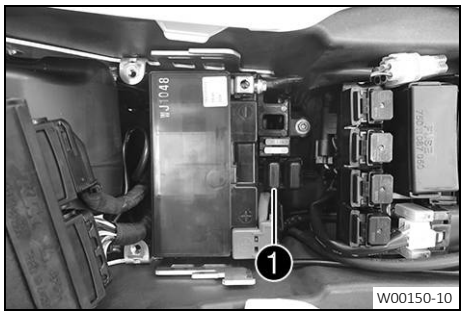

W00150-10

To change the fuse of the ABS hydraulic unit:

– Take off protection cap ❶ and remove the fuse.
– Insert a new fuse.

Fuse (58011109115) (p. 117)

– Mount the protection cap.

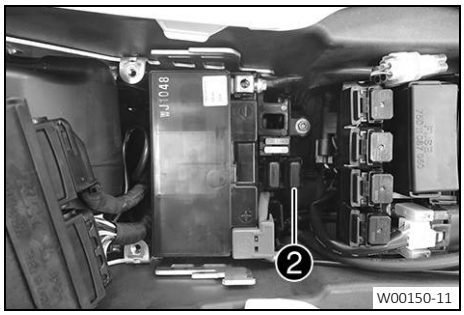

W00150-11

To change the fuse of the ABS return pump:

– Take off protection cap ❷ and remove the fuse.
– Insert a new fuse.

Fuse (58011109125) (p. 117)

– Mount the protection cap.

Finishing work

– Mount the retaining bracket.
– Position the engine control unit.
– Mount the seat. (p. 53)

15.6 Changing the fuses of individual electrical power consumers

Info
The fuse box containing the fuses of individual electrical power consumers is located under the seat.

Preparatory work

– Remove the seat. (p. 53)

Main work

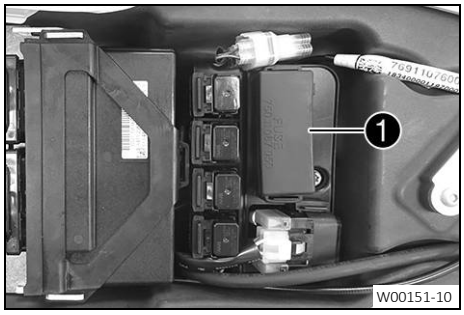

– Open fuse box cover 1.

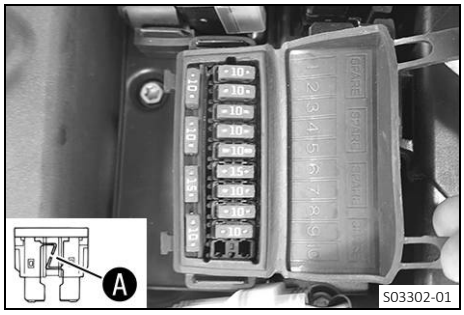

– Remove the faulty fuse.

Guideline

Fuse **1** - 10 A - ignition, combination instrument, clock, engine control unit
Fuse **2** - 10 A - ignition, combination instrument, engine control unit
Fuse **3** - 10 A - fuel pump
Fuse **4** - 10 A - radiator fan
Fuse **5** - 10 A - horn, brake light, turn signal
Fuse **6** - 15 A - high beam, low beam, position light, tail light, license plate lamp
Fuse **7** - 10 A - for auxiliary equipment ACC 1 (permanent positive)
Fuse **8** - 10 A - for auxiliary equipment ACC 2 (ignition plus), USB charging socket
Fuse **9** - 10 A - ABS
Fuse **10** - not assigned
Fuse **SPARE** - 10 A/15 A - spare fuses

Info
A faulty fuse has a burned-out fuse wire A.

Warning
Fire hazard Incorrect fuses overload the electrical system.
– Only use fuses with the required ampere value.
– Do not bypass or repair fuses.

– Insert the spare fuse with the correct rating.

Fuse (75011088010) (p. 117)
Fuse (75011088015) (p. 117)

Tip
Put a spare fuse in the fuse box so that it is available if needed.

– Check the function of the electrical power consumer.
– Close the fuse box cover.

Finishing work
– Mount the seat. (p. 53)

15.7 Removing the headlight mask with the headlight

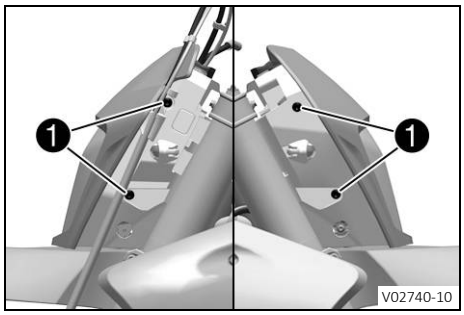

– Cover the fender with a cloth.
– Remove screws ❶ on both sides.
– Tip the headlight mask forward.

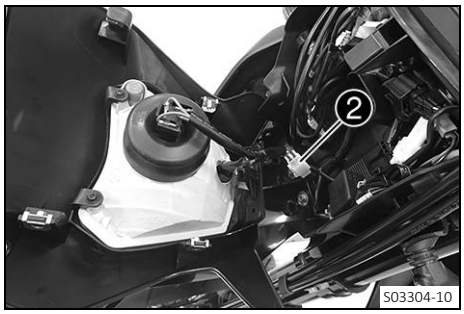

– Disconnect plug-in connector ❷ of the headlight.
– Take off the headlight mask.

15.8 Installing the headlight mask with the headlight

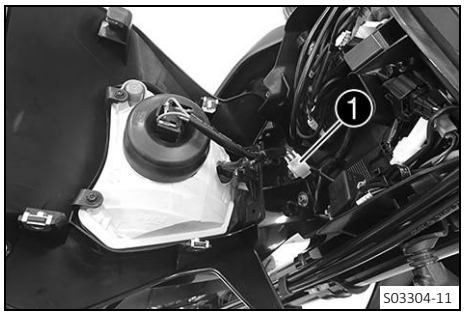

Main work
– Connect plug-in connector ❶ of the headlight.
– Check that the lighting is functioning properly.

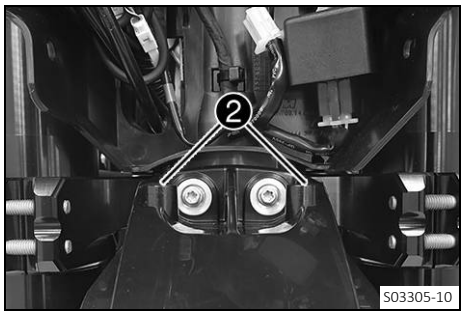

– Remove the cloth from the fender and position the headlight mask.
  ✔ Headlight mask engages in the fender on the bushings ❷.

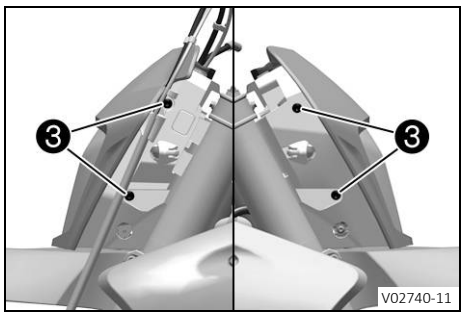

– Position the headlight mask.

Info
Pay attention to routing of the brake line.

– Mount and tighten screws ❸.

Guideline

Screw, headlight mask	M5	2 Nm (1.5 lbf ft)

Finishing work

– Check the headlight setting. (p. 91)

15.9 Changing the headlight bulb

Note

Impairments to reflectors and lamps Grease on the reflector reduces the emitted light.

Grease on the bulb will evaporate due to the heat and be deposited on the reflector.

Grease residue on the bulb reduces heat dissipation and increases the heat of the bulb, thus reducing its service life.

– Clean and degrease the bulbs before mounting.
– Do not touch the bulbs with your bare hands.

Preparatory work

– Remove the headlight mask with the headlight. (p. 88)

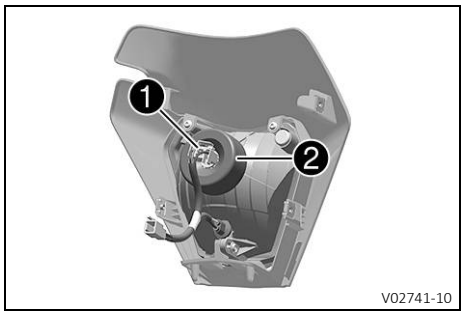

Main work

– Unplug connector ❶.
– Take off protection cap ❷ of the headlight bulb.

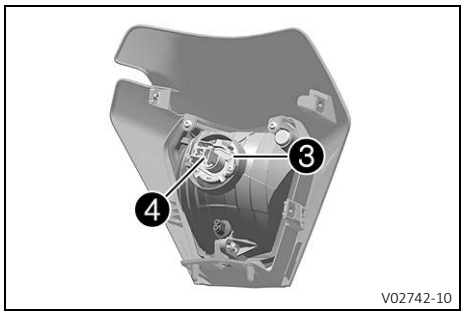

– Detach spring bar ❸.
– Remove headlight bulb ❹.
– Insert a new headlight bulb into the headlight housing.

Headlight (H4/socket P43t) (p. 117)

– Fix the headlight bulb in the headlight using the spring bar.
– Mount the protection cap. Plug in the connector.

Finishing work

– Install the headlight mask with the headlight. (p. 88)
– Check the headlight setting. (p. 91)

15.10 Changing the position light lamp

Note

Impairments to reflectors and lamps Grease on the reflector reduces the emitted light.

Grease on the bulb will evaporate due to the heat and be deposited on the reflector.

Grease residue on the bulb reduces heat dissipation and increases the heat of the bulb, thus reducing its service life.

- Clean and degrease the bulbs before mounting.
- Do not touch the bulbs with your bare hands.

Preparatory work

- Remove the headlight mask with the headlight. (p. 88)

Main work

- Remove bulb socket ❶.

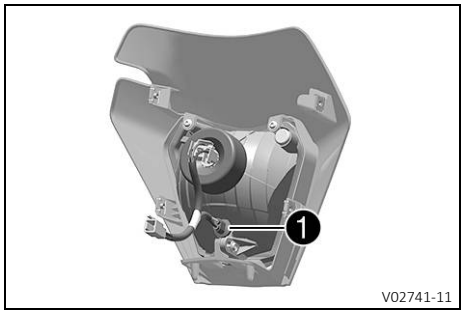

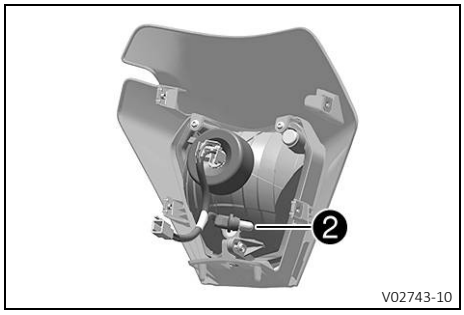

- Pull position light lamp ❷ out of the bulb socket.
- Insert a new position light lamp in the bulb socket.

Position light (W5W / socket W2.1x9.5d) (p. 117)

- Insert the bulb socket in the reflector.

Finishing work

- Install the headlight mask with the headlight. (p. 88)
- Check the headlight setting. (p. 91)

15.11 Changing the turn signal bulb

Note

Impairments to reflectors and lamps Grease on the reflector reduces the emitted light.

Grease on the bulb will evaporate due to the heat and be deposited on the reflector.

Grease residue on the bulb reduces heat dissipation and increases the heat of the bulb, thus reducing its service life.

- Clean and degrease the bulbs before mounting.
- Do not touch the bulbs with your bare hands.

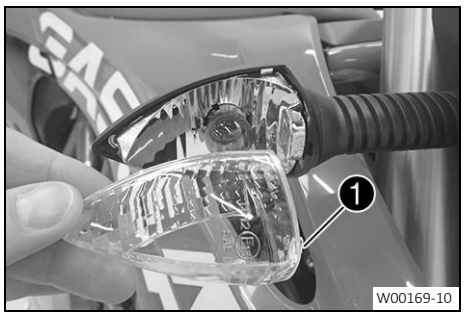

Main work

– Remove the screw on the rear of the turn signal housing.
– Carefully swing turn signal glass ❶ forward and take it off.
– Press the turn signal bulb lightly into the socket, turn it counter-clockwise by about 30°, and pull it out of the socket.

Info
Do not touch the reflector with your fingers, and keep it free from grease.

– Press the new turn signal bulb carefully into the socket and turn it clockwise until it stops.

Turn signal (RY10W / socket BAU15s) (p. 117)

– Position the turn signal glass.
– Insert the screw and first turn counterclockwise until it engages in the thread with a small jerk. Tighten the screw lightly.

Finishing work

– Check that the turn signal system is functioning properly.

15.12 Checking the headlight setting

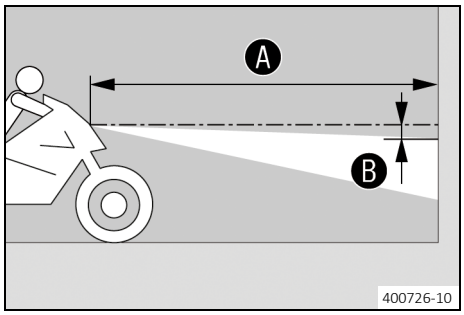

– Position the vehicle upright on a horizontal surface in front of a light wall and make a marking at the height of the center of the low beam headlight.
– Make another mark at a distance Ⓑ under the first marking.

Guideline

Distance Ⓑ	5 cm (2 in)

– Position the vehicle vertically at a distance Ⓐ away from the wall.

Guideline

Distance Ⓐ	5 m (16 ft)

– The rider now mounts the motorcycle with luggage and passenger if applicable.
– Switch on the low beam.
– Check the headlight setting.

The light-dark boundary must be exactly on the lower marking when the motorcycle is ready to be operated with the rider mounted along with any luggage and a passenger if applicable.

» If the boundary between light and dark does not meet specifications:
  – Adjust headlight range. (p. 92)

15.13 Adjusting the headlight range

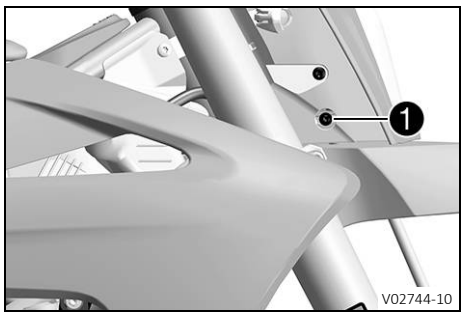

Preparatory work

– Check the headlight setting. (p. 91)

Main work

– Loosen screw 1.

– Adjust the headlight range by pivoting the headlight.

Guideline

The boundary between light and dark must be exactly on the lower mark for a motorcycle with rider (instructions on how to apply the mark: Checking the headlight setting).

Info

If you have a payload, you may have to correct the headlight range.

– Tighten screw 1.

15.14 Changing the combination instrument battery

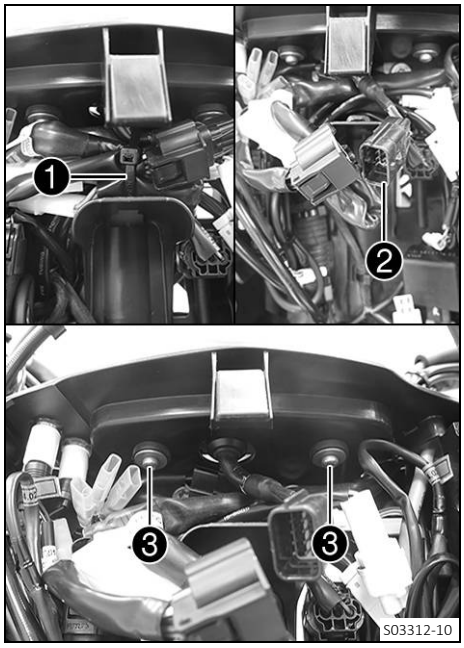

Preparatory work

– Remove the headlight mask with the headlight. (p. 88)

Main work

– Remove cable tie(s) 1.

– Disconnect plug-in connector 2.

– Remove screws 3.

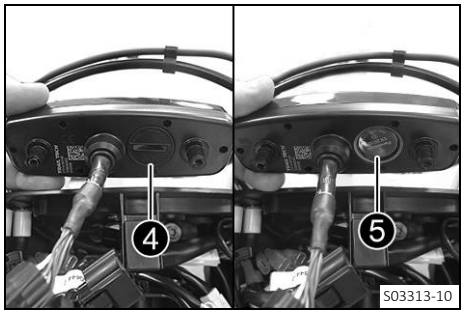

– Using a coin, turn protection cap 4 all the way counterclockwise and take it off.

– Remove combination instrument battery 5.

– Insert the combination instrument battery with the label facing outward.

Combination instrument battery (CR 2430) (p. 117)

– Check the O-ring of the protection cap for correct seating.

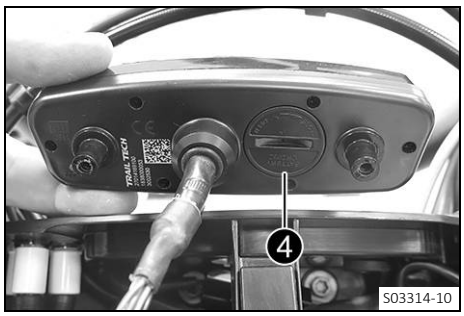

- Position protection cap ❹ and turn all the way clockwise using a coin.
- Press any button on the combination instrument.
  ✔ The combination instrument is activated.
- Position the combination instrument in the holder.
- Mount and tighten the screws with washers.
- Join plug-in connector ❷.
- Position the wiring harness and fasten it with cable ties ❶.

Finishing work

- Install the headlight mask with the headlight. (📖 p. 88)
- Check the headlight setting. (📖 p. 91)
- Set to kilometers or miles. (📖 p. 26)
- Set the clock. (📖 p. 27)

15.15 ACC1 and ACC2

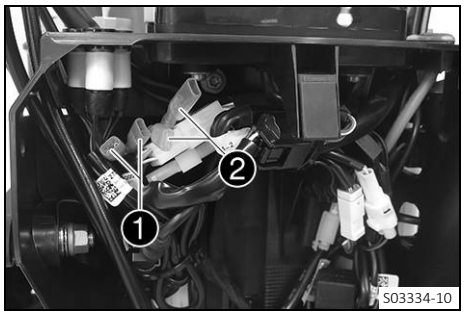

Installation location

- The power supplies ACC1 ❶ and ACC2 ❷ are located behind the headlight mask.

15.16 Diagnostics connector

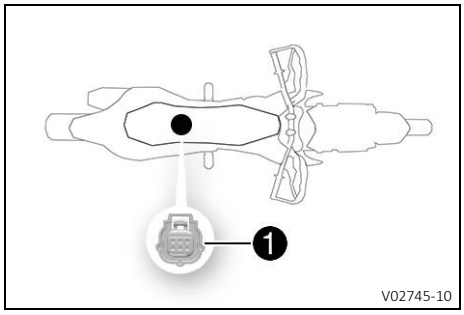

Diagnostics connector ❶ is located under the engine control unit.

16.1 Cooling system

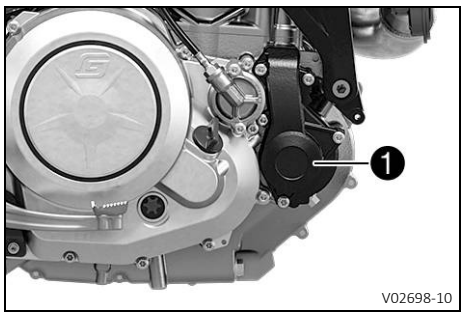

Water pump ❶ in the engine ensures forced circulation of the coolant. The pressure resulting from the warming of the cooling system is regulated by a valve in radiator cap ❷. Heat expansion causes excess coolant to flow into compensating tank ❸. When the temperature falls, this surplus coolant is sucked back into the cooling system. This ensures that operating the vehicle at the specified coolant temperature will not result in a risk of malfunctions.

125 °C (257 °F)

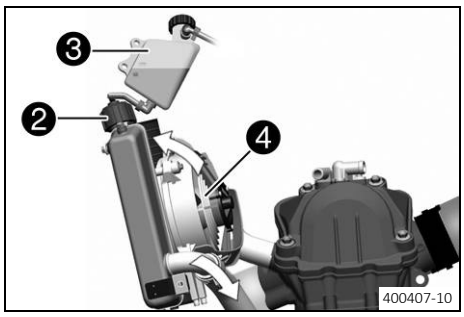

The coolant is cooled by the air stream and radiator fan ❹, which is activated depending on the temperature.
The lower the speed, the less the cooling effect. Dirty cooling fins also reduce the cooling effect.

16.2 Checking the antifreeze and coolant level

Warning

Danger of scalding During motorcycle operation, the coolant gets hot and is under pressure.

- Do not open the radiator, the radiator hoses or other cooling system components if the engine or the cooling system are at operating temperature.
- Allow the cooling system and the engine to cool down before you open the radiator, the radiator hoses or other components of the cooling system.
- In the event of scalding, rinse the area affected immediately with lukewarm water.

Warning

Danger of poisoning Coolant is harmful to health.

- Keep coolant out of the reach of children.
- Do not allow coolant to come into contact with the skin, the eyes and clothing.
- Consult a doctor immediately if coolant is swallowed.
- Rinse the affected area immediately with plenty of water in the event of contact with the skin.
- Rinse eyes thoroughly with water and consult a doctor immediately if coolant gets into the eyes.
- Change clothing if coolant spills onto your clothing.

Condition

The engine is cold.

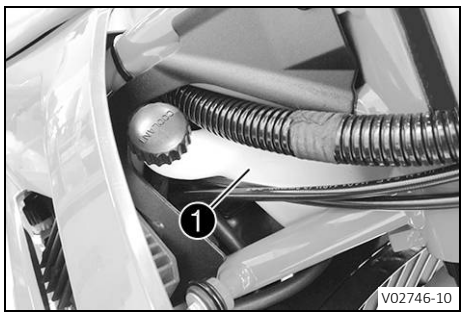

– Place the motorcycle on a horizontal surface using the side stand.
– Remove the cover of compensating tank ❶.
– Check the antifreeze in the coolant.

−25 … −45 °C (−13 … −49 °F)

» If the antifreeze in the coolant does not match the specified value:
  – Correct the antifreeze in the coolant.
– Check the coolant level in the compensating tank.

The coolant level must be between the two markings.

» If the coolant level does not match the specified value:
  – Correct the coolant level.

Coolant (📖 p. 122)

– Mount the cover of the compensating tank.

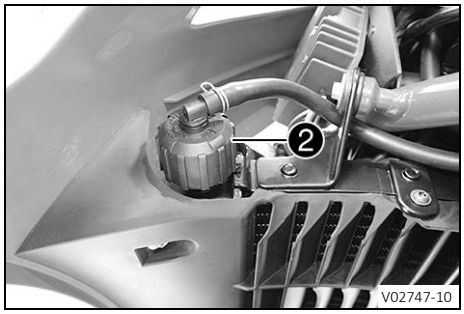

– Remove radiator cap ❷.
– Check the antifreeze in the coolant.

−25 … −45 °C (−13 … −49 °F)

» If the antifreeze in the coolant does not match the specified value:
  – Correct the antifreeze in the coolant.
– Check the coolant level in the radiator.

The radiator must be filled completely.

» If the coolant level does not match the specified value:
  – Check the coolant level and the reason for the loss.

Coolant (📖 p. 122)

– Mount the radiator cap.

16.3 Checking the coolant level

Warning

Danger of scalding During motorcycle operation, the coolant gets hot and is under pressure.

– Do not open the radiator, the radiator hoses or other cooling system components if the engine or the cooling system are at operating temperature.
– Allow the cooling system and the engine to cool down before you open the radiator, the radiator hoses or other components of the cooling system.
– In the event of scalding, rinse the area affected immediately with lukewarm water.

Warning

Danger of poisoning Coolant is harmful to health.

– Keep coolant out of the reach of children.
– Do not allow coolant to come into contact with the skin, the eyes and clothing.
– Consult a doctor immediately if coolant is swallowed.
– Rinse the affected area immediately with plenty of water in the event of contact with the skin.
– Rinse eyes thoroughly with water and consult a doctor immediately if coolant gets into the eyes.
– Change clothing if coolant spills onto your clothing.

Condition
The engine is cold.

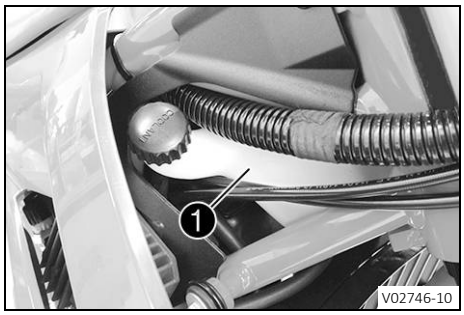

- Place the motorcycle on a horizontal surface using the side stand.
- Check the coolant level in compensating tank ❶.

  The coolant level must be between the two markings.

  » If the coolant level does not match the specified value:
  - Correct the coolant level.

    Coolant (📖 p. 122)

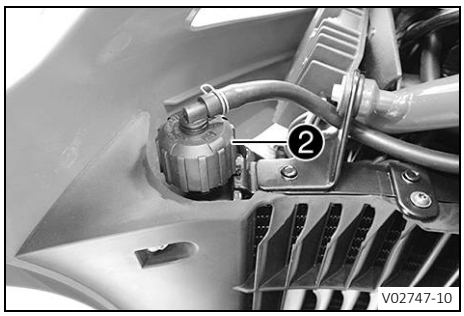

- Remove radiator cap ❷ and check the coolant level in the radiator.

  The radiator must be filled completely.

  » If the coolant level does not match the specified value:
  - Check the coolant level and the reason for the loss.

    Coolant (📖 p. 122)
- Mount the radiator cap.

16.4 Draining the coolant 🔧

Warning
Danger of scalding During motorcycle operation, the coolant gets hot and is under pressure.
- Do not open the radiator, the radiator hoses or other cooling system components if the engine or the cooling system are at operating temperature.
- Allow the cooling system and the engine to cool down before you open the radiator, the radiator hoses or other components of the cooling system.
- In the event of scalding, rinse the area affected immediately with lukewarm water.

Warning
Danger of poisoning Coolant is harmful to health.
- Keep coolant out of the reach of children.
- Do not allow coolant to come into contact with the skin, the eyes and clothing.
- Consult a doctor immediately if coolant is swallowed.
- Rinse the affected area immediately with plenty of water in the event of contact with the skin.
- Rinse eyes thoroughly with water and consult a doctor immediately if coolant gets into the eyes.
- Change clothing if coolant spills onto your clothing.

Condition
- The engine is cold.

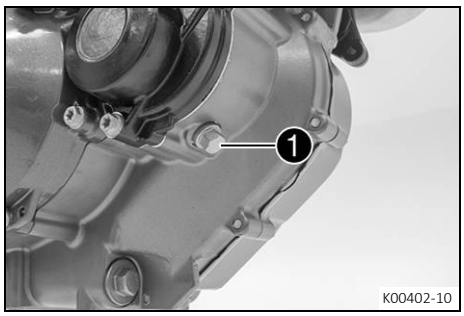

- Position the motorcycle upright.
- Position an appropriate container under the engine.
- Remove screw 1. Take off the radiator cap.
- Completely drain the coolant.
- Mount and tighten screw 1 with a new seal ring.

  Guideline

Screw plug, water pump drain hole	M10x1	15 Nm (11.1 lbf ft)

16.5 Filling/bleeding the cooling system

Warning

Danger of poisoning Coolant is harmful to health.

- Keep coolant out of the reach of children.
- Do not allow coolant to come into contact with the skin, the eyes and clothing.
- Consult a doctor immediately if coolant is swallowed.
- Rinse the affected area immediately with plenty of water in the event of contact with the skin.
- Rinse eyes thoroughly with water and consult a doctor immediately if coolant gets into the eyes.
- Change clothing if coolant spills onto your clothing.

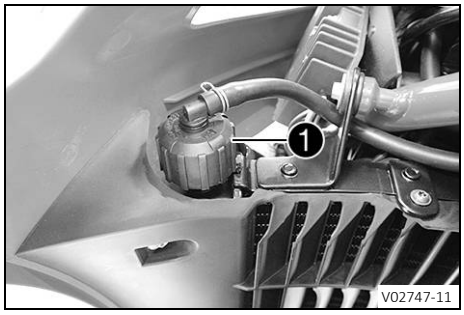

- Stand the motorcycle on a level surface using the side stand.
- Remove radiator cap 1.
- Refill with coolant.

  Coolant (p. 122)

- Completely fill the radiator with coolant.
- Mount radiator cap 1.

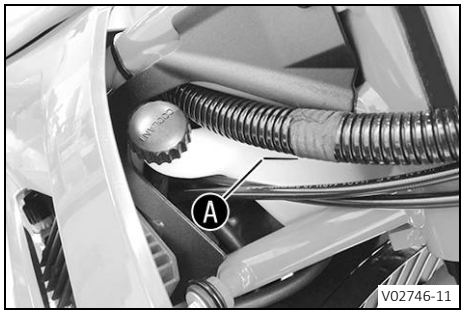

- Remove the cover of the compensating tank.
- Add coolant up to the marking A.
- Mount the cover of the compensating tank.

Danger

Danger of poisoning Exhaust gases are toxic and inhaling them may result in unconsciousness and death.

- Always make sure there is sufficient ventilation when running the engine.
- Use effective exhaust extraction when starting or running the engine in an enclosed space.

- Start the engine and allow it to warm up.
- Stop the engine and allow it to cool down.
- Check the coolant level. (p. 95)

16.6 Changing the coolant

Warning

Danger of scalding During motorcycle operation, the coolant gets hot and is under pressure.

- Do not open the radiator, the radiator hoses or other cooling system components if the engine or the cooling system are at operating temperature.
- Allow the cooling system and the engine to cool down before you open the radiator, the radiator hoses or other components of the cooling system.
- In the event of scalding, rinse the area affected immediately with lukewarm water.

Warning

Danger of poisoning Coolant is harmful to health.

- Keep coolant out of the reach of children.
- Do not allow coolant to come into contact with the skin, the eyes and clothing.
- Consult a doctor immediately if coolant is swallowed.
- Rinse the affected area immediately with plenty of water in the event of contact with the skin.
- Rinse eyes thoroughly with water and consult a doctor immediately if coolant gets into the eyes.
- Change clothing if coolant spills onto your clothing.

Condition

- The engine is cold.

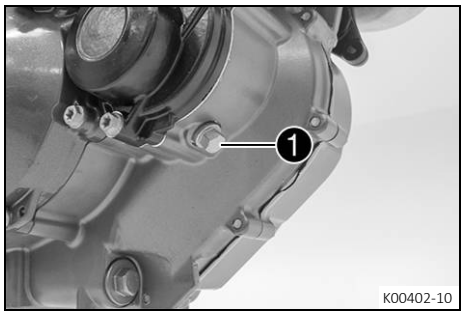

- Position the motorcycle upright.
- Position an appropriate container under the engine.
- Remove screw 1 with the seal ring.

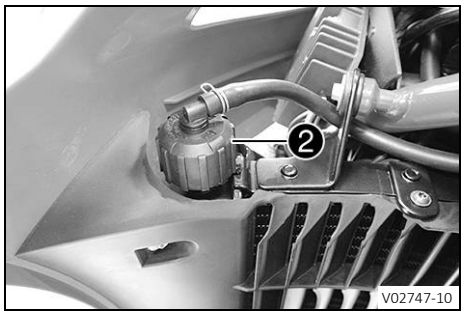

- Remove radiator cap 2.
- Completely drain the coolant.

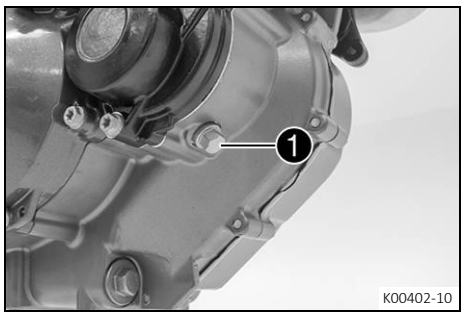

- Mount and tighten screw 1 with a new seal ring.

  Guideline

Screw plug, water pump drain hole	M10x1	15 Nm (11.1 lbf ft)

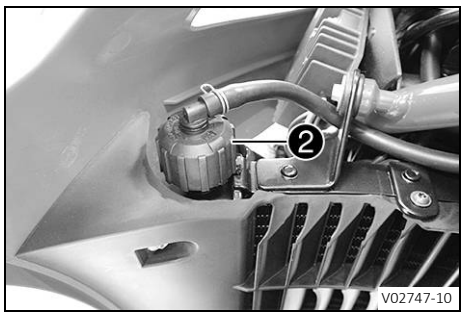

– Stand the motorcycle on a level surface using the side stand.
– Refill with coolant.

Coolant	1.20 l (1.27 qt.)	Coolant (📖 p. 122)

– Completely fill the radiator with coolant.
– Mount radiator cap ❷.

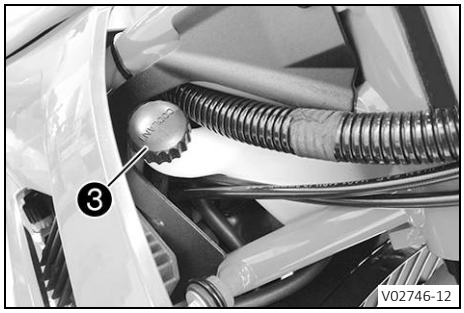

– Remove compensating tank cover ❸.
– Add coolant to the top marking.
– Mount the cover of the compensating tank.

Danger

Danger of poisoning Exhaust gases are toxic and inhaling them may result in unconsciousness and death.

– Always make sure there is sufficient ventilation when running the engine.
– Use effective exhaust extraction when starting or running the engine in an enclosed space.

– Start the engine and allow it to warm up.
– Stop the engine and allow it to cool down.

Finishing work

– Check the coolant level. (📖 p. 95)

17.1 Changing the riding mode

Info
The desired drive mode can be activated via the **MAP** button on the combination switch.
The setting most recently selected is activated again when restarting.
The drive mode can also be changed during the ride.

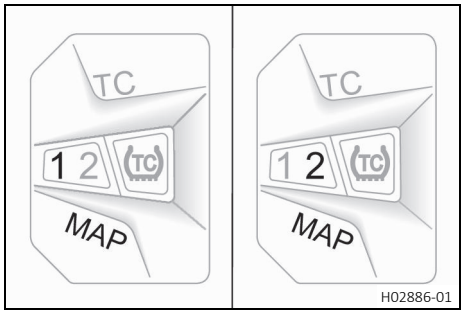

Condition
Throttle grip closed.

– Press **MAP** button until the LED displays the desired drive mode. Drive mode **1** is **STREET** and drive mode **2** is **SPORT**.
  ✔ STREET – balanced response
  ✔ SPORT – direct response

Info
The drive mode only influences the throttle response.
The homologated performance is available in both drive modes.
In drive mode **2**, the traction control allows more slip and rise of the front wheel.

17.2 Adjusting traction control

Info
Traction control is activated when the ignition is switched on.
The traction control lowers the tightening torque in case of loss of traction in the rear wheel.
When traction control is switched off, the rear wheel may spin during high acceleration and on surfaces with low grip, resulting in a risk of crashing.
Traction control can also be adjusted during the ride.
Traction control cannot be deactivated until a minimum speed has previously been reached and the self test is complete.

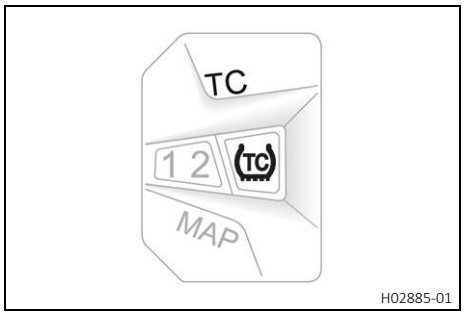

Deactivating traction control:

Condition
Throttle grip closed.
Speed before deactivation: ≥ 4 km/h (≥ 2.5 mph)

– Press and hold the **TC** button for five seconds.
  ✔ The **TC** LED lights up when the traction control is deactivated.

Activating the traction control:

Condition
Throttle grip closed.

– Press and hold the **TC** button for five seconds.
  ✔ The **TC** LED does not light up when the traction control is activated.

Info
If the TC indicator lamp and both riding mode lamps light up at same time, a malfunction has been detected in the traction control. Contact an authorized GASGAS Motorcycles workshop.

17.3 Checking the basic position of the shift lever

Info
When driving, the shift lever must not touch the rider's boot when in the basic position.
If the shift lever is permanently touching the boot, the transmission will be subject to excessive load; this can cause a malfunction of the quickshifter (optional).

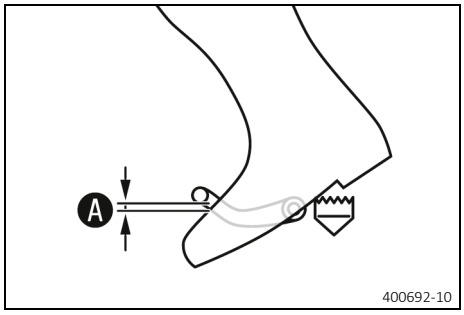

– Sit on the vehicle in the riding position and determine distance Ⓐ between the upper edge of your boot and the shift lever.

Distance between shift lever and upper edge of boot	10 … 20 mm (0.39 … 0.79 in)

» If the distance does not meet specifications:
  – Adjust the basic position of the shift lever. 🔧 (📖 p. 101)

17.4 Adjusting the basic position of the shift lever 🔧

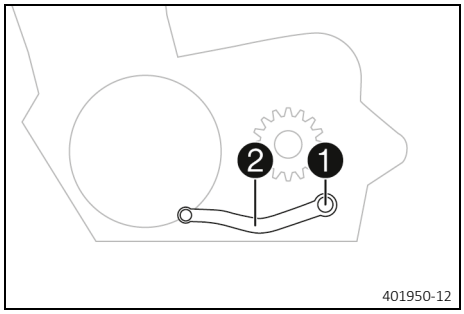

– Remove screw ❶ with the washers and take off shift lever ❷.

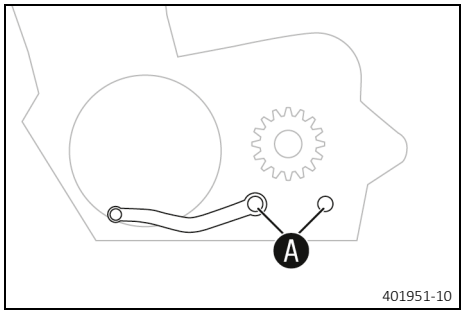

– Clean gear teeth Ⓐ of the shift lever and shift shaft.
– Mount shift lever ❷ on the shift shaft in the required position and engage the gearing.

Info
The range of adjustment is limited.
The shift lever must not come into contact with any other vehicle components during the shift procedure.

– Mount and tighten screw ❶ with washers.

Guideline

Screw, shift lever	M6	14 Nm (10.3 lbf ft) **Loctite®243™**

18.1 Checking the engine oil level

Info
The engine oil level must be checked when the engine is warm.

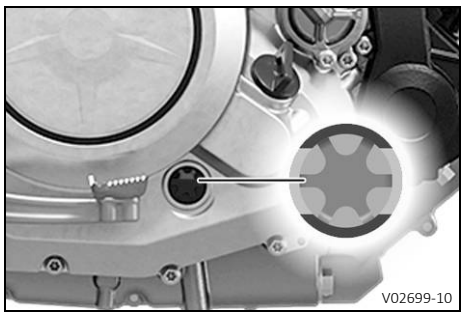

Condition
The engine is at operating temperature.

Preparatory work
– Stand the motorcycle upright on a horizontal surface.

Main work
– Check the engine oil level.

Info
After switching off the engine, wait one minute before checking the level.

The engine oil must be between the lower and upper edge of the oil level viewer.

» If the engine oil level is not at the specified level:
  – Add engine oil. (p. 105)

18.2 Changing the engine oil and oil filter, cleaning the oil screens

Warning
Danger of scalding Engine and gear oil get hot when the motorcycle is operated.
– Wear suitable protective clothing and safety gloves.
– In the event of scalding, rinse the area affected immediately with lukewarm water.

Note
Environmental hazard Hazardous substances cause environmental damage.
– Dispose of oils, grease, filters, fuel, cleaning agents, brake fluid, etc., correctly and in compliance with the applicable regulations.

Info
Drain the engine oil while the engine is at operating temperature.

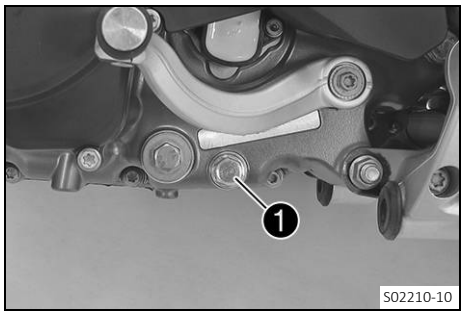

– Position an appropriate container under the engine.
– Remove oil drain plug 1 with the magnet and seal ring.
– Allow the engine oil to drain completely.

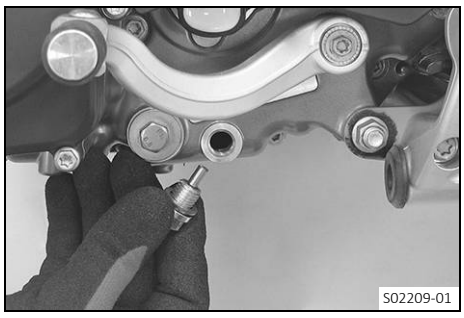

- Thoroughly clean the oil drain plug with magnet.
- Mount the oil drain plug with the magnet and seal ring and tighten it.

  Guideline

Oil drain plug with magnet	M12x1.5	20 Nm (14.8 lbf ft)

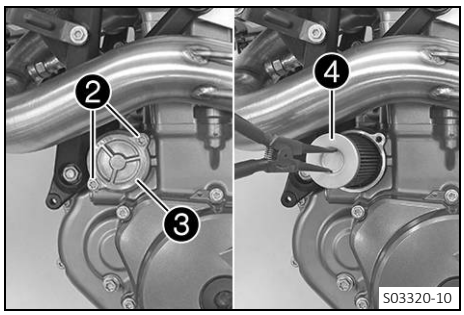

- Remove screws ❷. Take off oil filter cover ❸ with the O-ring.
- Pull oil filter ❹ out of the oil filter housing.

Lock ring plier (51012011000)

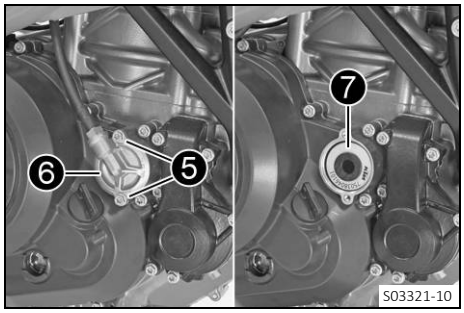

- Remove screws ❺. Take off oil filter cover ❻ with the O-ring.
- Pull oil filter ❼ out of the oil filter housing.

Lock ring plier (51012011000)

- Allow the engine oil to drain completely.
- Thoroughly clean the parts and the sealing surface.

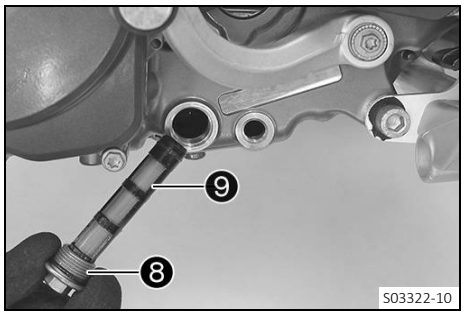

- Remove screw plug ❽ with oil screen ❾ and the O-rings.

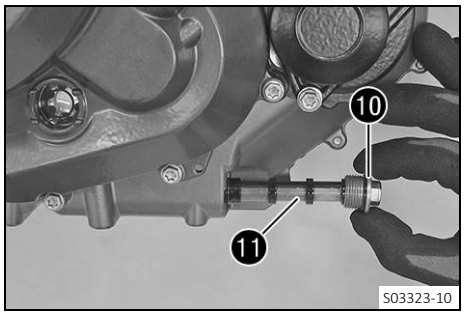

- Remove screw plug ❿ with oil screen ⓫ and the O-rings.
- Allow the engine oil to drain completely.
- Thoroughly clean the parts and the sealing surface.

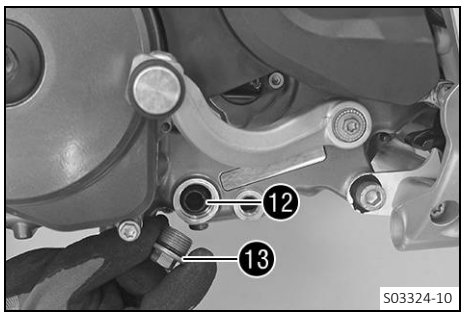

- Position oil screen 12 with the O-rings.
- Mount and tighten screw plug 13 with the O-ring.

Guideline

Plug, oil screen	M20x1.5	15 Nm (11.1 lbf ft)

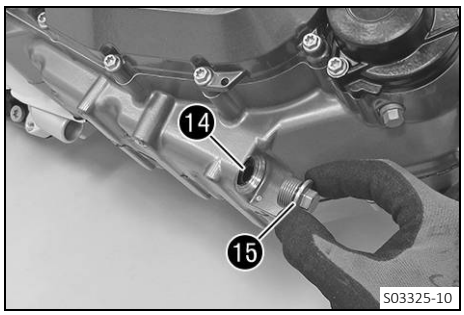

- Position oil screen 14 with the O-rings.
- Mount and tighten screw plug 15 with the O-ring.

Guideline

Plug, oil screen	M20x1.5	15 Nm (11.1 lbf ft)

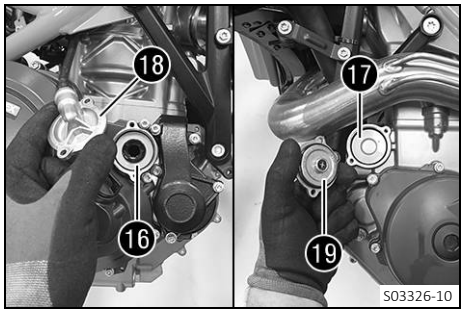

- Insert oil filters 16 and 17.
- Oil the O-rings of the oil filter covers. Mount oil filter covers 18 and 19.
- Mount and tighten the screws.

Guideline

Screw, oil filter cover	M5	6 Nm (4.4 lbf ft)

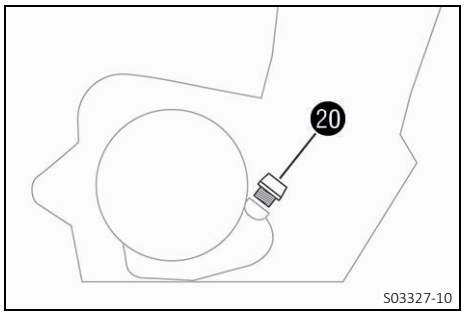

- Remove filler plug 20 with the O-ring, and fill up with engine oil.

Engine oil	1.70 l (1.8 qt.)	Engine oil (SAE 10W/50) (📖 p. 122)

- Mount and tighten filler plug 20 with the O-ring.

Danger

Danger of poisoning Exhaust gases are toxic and inhaling them may result in unconsciousness and death.

- Always make sure there is sufficient ventilation when running the engine.
- Use effective exhaust extraction when starting or running the engine in an enclosed space.

- Start the engine and check it for leaks.

18.3 Adding engine oil

Info
Too little engine oil or poor-quality engine oil will result in premature wear of the engine.

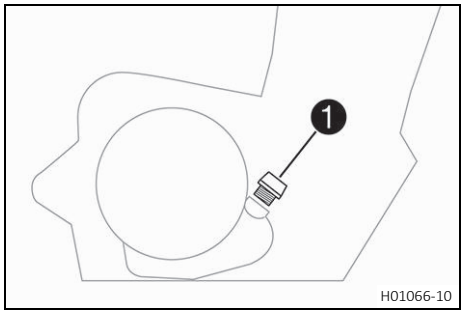

Main work

– Remove filler plug 1 with the O-ring, and fill up with engine oil.
– Fill engine oil to the middle of the level viewer.

Engine oil (SAE 10W/50) (p. 122)

Info
In order to achieve optimal engine oil performance, it is not advisable to mix different engine oils.
GASGAS Motorcycles recommends changing the engine oil, if necessary.

– Mount and tighten filler plug 1 with the O-ring.

Danger
Danger of poisoning Exhaust gases are toxic and inhaling them may result in unconsciousness and death.
– Always make sure there is sufficient ventilation when running the engine.
– Use effective exhaust extraction when starting or running the engine in an enclosed space.

– Start the engine and check it for leaks.

Finishing work

– Check the engine oil level. (p. 102)

19.1 Cleaning the motorcycle

Note

Material damage Components become damaged or destroyed if a pressure cleaner is used incorrectly.

The high pressure forces water into the electrical components, connectors, throttle cables, and bearings, etc.

Pressure which is too high causes malfunctions and destroys components.

– Do not direct the water jet directly on to electrical components, connectors, throttle cables or bearings.
– Maintain a minimum distance between the nozzle of the pressure cleaner and the component.

Minimum clearance	60 cm (23.6 in)

Note

Environmental hazard Hazardous substances cause environmental damage.

– Dispose of oils, grease, filters, fuel, cleaning agents, brake fluid, etc., correctly and in compliance with the applicable regulations.

Info

To maintain the value and appearance of the motorcycle over a long period, clean it regularly.

Avoid direct sunshine when cleaning the motorcycle.

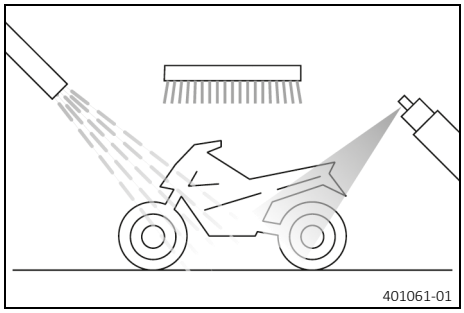

– Close off exhaust system to keep water from entering.
– Remove loose dirt first with a soft jet of water.
– Spray the heavily soiled parts with a normal commercial motorcycle cleaner and clean using a brush.

Motorcycle cleaner (📖 p. 124)

Info

Use warm water containing normal motorcycle cleaner and a soft sponge.

Never apply motorcycle cleaner to a dry vehicle; always rinse the vehicle with water first.

If the vehicle was operated in road salt, clean it with cold water. Warm water would enhance the corrosive effects of salt.

– After rinsing the motorcycle with a gentle spray of water, allow it to dry thoroughly.
– Remove the closure of the exhaust system.

Warning

Danger of accidents Moisture and dirt impair the brake system.

– Brake carefully several times to dry out and remove dirt from the brake linings and the brake discs.

– After cleaning, ride the vehicle a short distance until the engine warms up.

Info

The heat produced causes water at inaccessible locations in the engine and on the brake system to evaporate.

– Push back the protection caps of the handlebar controls to allow any water that has penetrated to evaporate.

– After the motorcycle has cooled down, lubricate all moving parts and pivot points.
– Clean the chain. (p. 59)
– Treat bare metal (except for brake discs and the exhaust system) with a corrosion inhibitor.

Preserving materials for paints, metal and rubber (p. 124)

– Treat all painted parts with a mild paint care product.

Shine spray for paint, plastic and chromium (p. 124)

Info
Do not polish parts that were matte when delivered as this would strongly impair the material quality.

– Treat all plastic parts and powder-coated parts with a mild cleaning and care product.

Special cleaner for glossy and matte paint finishes, metal and plastic surfaces (p. 124)

– Lubricate the ignition/steering lock.

Universal oil spray (p. 124)

19.2 Checks and maintenance steps for winter operation

Info
If you use the motorcycle in winter, salt can be expected on the roads. You should therefore take precautions against aggressive road salt.
After riding on salted roads, thoroughly clean the vehicle with cold water and dry it well. Warm water enhances the corrosive effects of salt.

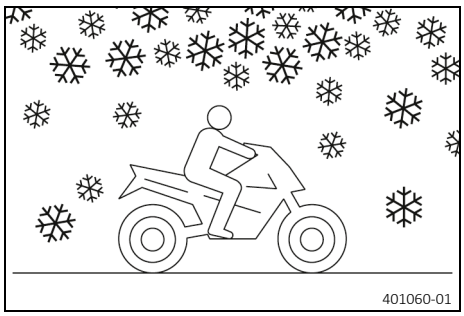

– Clean the motorcycle. (p. 106)
– Clean the brake system.

Info
After **EVERY** trip on salted roads, thoroughly clean the brake calipers and brake linings, after they have cooled down and without removing them, with cold water and dry them carefully.
After riding on salted roads, thoroughly clean the motorcycle with cold water and dry it well.

– Treat the engine, the swingarm, and all other bare or zinc-plated parts (except the brake discs) with a wax-based corrosion inhibitor.

Info
Corrosion inhibitor must not come in contact with the brake discs as this would greatly reduce the braking force.

– Clean the chain. (p. 59)

20.1 Storage

Warning

Danger of poisoning Fuel is harmful to health.

- Avoid skin, eye and clothing contact with fuel.
- Immediately consult a doctor if you swallow fuel.
- Do not inhale fuel vapors.
- Rinse the affected area immediately with plenty of water in the event of contact with the skin.
- Rinse the eyes thoroughly with water, and consult a doctor in case of fuel contact with the eyes.
- Change your clothing if fuel spills on them.
- Keep fuels correctly in a suitable canister, and out of the reach of children.

Info

If the motorcycle is not being used for an extended length of time, additional measures are recommended. Before storing the motorcycle, check all parts for function and wear. If service, repairs, or replacements are necessary, you should do this during the storage period (less workshop overload). This allows you to avoid long waiting periods when the next season starts.

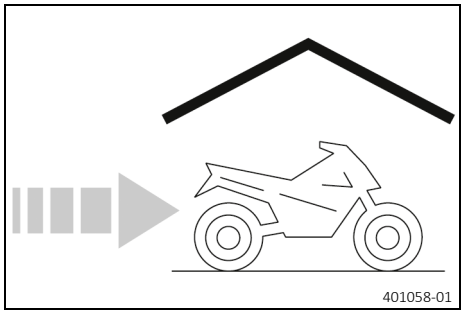

- When refueling for the last time before taking the motorcycle out of service, add fuel additive.

Fuel additive (p. 124)

- Refuel. (p. 41)

Tip

Fill the fuel tank completely as specified, using fuel with the lowest possible ethanol content.

- Clean the motorcycle. (p. 106)
- Change the engine oil and the oil filter, clean the oil screens. (p. 102)
- Check the antifreeze and coolant level. (p. 94)
- Check tire pressure. (p. 81)
- Remove the 12-V battery.
- Charge the 12-V battery. (p. 84)

  Guideline

Storage temperature of the 12-V battery without direct sunlight	0 … 35 °C (32 … 95 °F)

- Store the vehicle in a dry location that is not subject to large fluctuations in temperature.

Info

GASGAS Motorcycles recommends jacking up the motorcycle.

- Raise the motorcycle with the rear lifting gear. (p. 50)
- Lift the motorcycle with the front lifting gear. (p. 51)
- Cover the motorcycle with a tarp or cover that is permeable to air.

Info
Do not use non-porous materials since they prevent humidity from escaping, thus causing corrosion.
Avoid running the engine for a short time only. Since the engine cannot warm up properly, the water vapor produced during combustion condenses and causes valves and the exhaust system to rust.

20.2 Preparing for use after storage

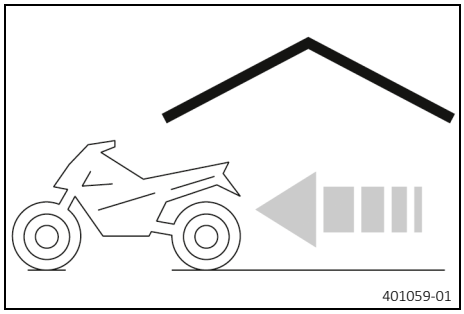

- Take the motorcycle off the front lifting gear. (p. 51)
- Remove the rear of the motorcycle from the wheel stand. (p. 51)
- Charge the 12-V battery. (p. 84)
- Install the 12-V battery. (p. 83)
- Set the clock. (p. 27)
- Perform checks and maintenance measures when preparing for use. (p. 33)
- Take a test ride.

Faults	Possible cause	Action
The engine does not turn when the start button is pressed	Operating error	– Carry out start procedure. (📖 p. 33)
	12 V battery discharged	– Charge the 12-V battery. 🔧 (📖 p. 84) – Check the open-circuit current. 🔧
	Fuse **1**, **2** or **3** blown	– Change the fuses of individual electrical power consumers. (📖 p. 87)
	Main fuse blown	– Change the main fuse. (📖 p. 85)
	No ground connection present	– Check the ground connection.
Engine turns only if the clutch lever is drawn	The vehicle is in gear	– Shift the transmission to neutral position.
	The vehicle is in gear and the side stand is folded out	– Shift the transmission to neutral position.
The engine turns but does not start	Operating error	– Carry out start procedure. (📖 p. 33)
	Fuse **3** blown	– Change the fuses of individual electrical power consumers. (📖 p. 87)
	Quick release coupling not joined	– Join quick release coupling.
	Malfunction in the electronic fuel injection	– Read out the fault memory using the GAS-GAS Motorcycles diagnostics tool. 🔧
	Throttle opened while starting	– When starting, **DO NOT** open the throttle. – Carry out start procedure. (📖 p. 33)
Engine has too little power.	Air filter is very dirty	– Remove the air filter. 🔧 (📖 p. 57) – Install the air filter. 🔧 (📖 p. 58)
	Fuel screen is very dirty	– Change the fuel screen. 🔧
	Fuel filter is very dirty	– Check the fuel pressure. 🔧
	Malfunction in the electronic fuel injection	– Read out the fault memory using the GAS-GAS Motorcycles diagnostics tool. 🔧
Engine overheats	Too little coolant in cooling system	– Check the cooling system for leakage. – Check the coolant level. (📖 p. 95)
	Radiator fins very dirty	– Clean radiator fins.
	Foam formation in cooling system	– Drain the coolant. 🔧 (📖 p. 96) – Fill/bleed the cooling system. 🔧 (📖 p. 97)
	Buckled or damaged radiator hose	– Change the radiator hose. 🔧
	Thermostat is faulty	– Check the thermostat. 🔧
	Fuse **4** blown	– Change the fuses of individual electrical power consumers. (📖 p. 87)
	Defect in radiator fan system	– Check the radiator fan system. 🔧
	Air in cooling system	– Fill/bleed the cooling system. 🔧 (📖 p. 97)
Malfunction indicator lamp lights up	Malfunction in the electronic fuel injection	– Read out the fault memory using the GAS-GAS Motorcycles diagnostics tool. 🔧
Engine dies during the journey	Lack of fuel	– Refuel. (📖 p. 41)
	Fuse **1**, **2** or **3** blown	– Change the fuses of individual electrical power consumers. (📖 p. 87)
ABS warning lamp lights up	ABS fuse blown	– Change the ABS fuses. (📖 p. 86)
	Large difference in wheel speeds of the front and rear wheels	– Stop the vehicle, switch off the ignition, and start it again.
	Malfunction in ABS	– Read out the fault memory using the GAS-GAS Motorcycles diagnostics tool. 🔧
High oil consumption	Engine vent hose bent	– Route the vent hose without bends or change it if necessary.
	Engine oil level too high	– Check the engine oil level. (📖 p. 102)

Faults	Possible cause	Action
High oil consumption	Engine oil too thin (low viscosity)	– Change the engine oil and the oil filter, clean the oil screens. 🔧 (📖 p. 102)
Headlight and parking light are not functioning	Fuse **6** blown	– Change the fuses of individual electrical power consumers. (📖 p. 87)
Turn signal, brake light and horn not functioning	Fuse **5** blown	– Change the fuses of individual electrical power consumers. (📖 p. 87)
Time is not (correctly) displayed	Fuse **1** blown	– Change the fuses of individual electrical power consumers. (📖 p. 87) – Set the clock. (📖 p. 27)
12 V battery discharged	Ignition not switched off when vehicle was parked	– Charge the 12-V battery. 🔧 (📖 p. 84)
	The 12-V battery is not being charged by the alternator	– Check the charging voltage. 🔧 – Check the open-circuit current. 🔧
Combination instrument shows nothing in the display	Fuse **1** or **2** blown	– Change the fuses of individual electrical power consumers. (📖 p. 87) – Set the clock. (📖 p. 27)
Speedometer in combination instrument not functioning	Speedometer wiring harness is damaged or plug-in connection is oxidized	– Check the wiring harness and plug-in connection.

22.1 Engine

Design	1-cylinder 4-stroke engine, water-cooled
Displacement	692.7 cm³ (42.271 cu in)
Stroke	80 mm (3.15 in)
Bore	105 mm (4.13 in)
Compression ratio	12.7:1
Idle speed	
Coolant temperature: ≥ 70 °C (≥ 158 °F)	1,650 ± 50 rpm
Control	OHC, intake with cam levers, exhaust controlled by rocker arm, chain drive
Valve diameter, intake	42 mm (1.65 in)
Valve diameter, exhaust	34 mm (1.34 in)
Valve play, cold	
Intake at: 20 °C (68 °F)	0.10 … 0.15 mm (0.0039 … 0.0059 in)
Exhaust at: 20 °C (68 °F)	0.22 … 0.27 mm (0.0087 … 0.0106 in)
Crankshaft bearing	2 roller bearings
Conrod bearing	Slide bearing
Piston pin bearing	Piston pin with **DLC** coating
Pistons	Forged light alloy
Piston rings	1 compression ring, 1 lower compression ring, 1 oil ring with spring expander
Engine lubrication	Semi-dry sump lubrication system with two trochoid pumps
Primary transmission	36:79
Clutch	**APTC™** antihopping clutch in oil bath/hydraulically operated
Transmission	6-gear transmission, claw shifted
Transmission ratio	
First gear	14:35
Second gear	16:28
Third gear	20:27
Fourth gear	21:23
Fifth gear	23:22
Sixth gear	23:20
Mixture preparation	Electronic fuel injection
Ignition	Contactless controlled fully electronic ignition with digital ignition adjustment
Alternator	12 V, 300 W
Spark plug	
Inside spark plug	NGK LKAR9BI-10
Outside spark plug	NGK LMAR7DI-10
Spark plug electrode gap	1.0 mm (0.039 in)
Cooling	Water cooling, permanent circulation of coolant by water pump
Starting aid	Starter motor, automatic decompression

22.2 Engine tightening torques

Screw, membrane fixation	M3	2 Nm (1.5 lbf ft) **Loctite®243™**
Hose clamp, intake flange	M4	2.5 Nm (1.84 lbf ft)
Oil nozzle for clutch lubrication	M4	0.4 Nm (0.3 lbf ft)
Oil nozzle for conrod bearing lubrication	M4	0.8 Nm (0.59 lbf ft)
Locking screw for bearing	M5	6 Nm (4.4 lbf ft) **Loctite®243™**
Oil nozzle in cylinder head	M5	2 Nm (1.5 lbf ft)
Remaining screws, engine	M5	6 Nm (4.4 lbf ft)
Screw, axial lock of camshaft and balancer shaft	M5	6 Nm (4.4 lbf ft) **Loctite®243™**
Screw, clutch spring	M5	6 Nm (4.4 lbf ft)
Screw, cover plate for oil return line	M5	6 Nm (4.4 lbf ft) **Loctite®243™**
Screw, gear sensor	M5	5 Nm (3.7 lbf ft) **Loctite®243™**
Screw, oil filter cover	M5	6 Nm (4.4 lbf ft)
Screw, oil pump cover	M5	6 Nm (4.4 lbf ft) **Loctite®243™**
Screw, oil pump cover, top	M5	6 Nm (4.4 lbf ft) **Loctite®243™**
Screw, retaining bracket	M5	8 Nm (5.9 lbf ft) **Loctite®243™**
Screw, shift shaft sensor	M5	5 Nm (3.7 lbf ft) **Loctite®243™**
Remaining screws, engine	M6	10 Nm (7.4 lbf ft)
Screw, alternator cover	M6x25	10 Nm (7.4 lbf ft) **Loctite®243™**
Screw, alternator cover	M6x30	10 Nm (7.4 lbf ft) **Loctite®243™**
Screw, alternator cover (timing chain shaft through-hole)	M6	10 Nm (7.4 lbf ft) **Loctite®243™**
Screw, camshaft bearing bridge	M6	10 Nm (7.4 lbf ft)
Screw, camshaft bearing support	M6x80	10 Nm (7.4 lbf ft)
Screw, camshaft bearing support	M6x90	10 Nm (7.4 lbf ft)
Screw, clutch cover	M6	10 Nm (7.4 lbf ft)
Screw, clutch cover	M6x25	10 Nm (7.4 lbf ft)
Screw, clutch cover	M6x30	10 Nm (7.4 lbf ft)
Screw, clutch cover	M6x35	10 Nm (7.4 lbf ft)
Screw, clutch slave cylinder	M6x20	10 Nm (7.4 lbf ft)
Screw, crankshaft speed sensor	M6	10 Nm (7.4 lbf ft) **Loctite®243™**
Screw, cylinder (timing chain shaft) on housing	M6	10 Nm (7.4 lbf ft) **Loctite®243™**
Screw, cylinder head	M6	10 Nm (7.4 lbf ft) **Loctite®243™**
Screw, engine case	M6	10 Nm (7.4 lbf ft)

Screw, engine case	M6x25	10 Nm (7.4 lbf ft)
Screw, engine case	M6x30	10 Nm (7.4 lbf ft)
Screw, engine case	M6x70	10 Nm (7.4 lbf ft)
Screw, engine case	M6x80	10 Nm (7.4 lbf ft)
Screw, engine sprocket cover and slave cylinder of the clutch	M6x35	10 Nm (7.4 lbf ft)
Screw, guide rail	M6x30	10 Nm (7.4 lbf ft) **Loctite®2701™**
Screw, guide rail	M6x20	10 Nm (7.4 lbf ft) **Loctite®243™**
Screw, ignition coil	M6	10 Nm (7.4 lbf ft)
Screw, locking lever	M6	10 Nm (7.4 lbf ft) **Loctite®243™**
Screw, resonator	M6	10 Nm (7.4 lbf ft)
Screw, secondary air system cover	M6x12	10 Nm (7.4 lbf ft) **Loctite®243™**
Screw, shift drum locating	M6	15 Nm (11.1 lbf ft) **Loctite®243™**
Screw, shift lever	M6	14 Nm (10.3 lbf ft) **Loctite®243™**
Screw, starter motor	M6	10 Nm (7.4 lbf ft)
Screw, stator	M6	10 Nm (7.4 lbf ft) **Loctite®243™**
Screw, tensioning rail	M6x30	10 Nm (7.4 lbf ft) **Loctite®2701™**
Screw, thermostat case	M6	10 Nm (7.4 lbf ft)
Screw, timing chain shaft	M6	10 Nm (7.4 lbf ft)
Screw, valve cover	M6	10 Nm (7.4 lbf ft)
Screw, water pump cover	M6	10 Nm (7.4 lbf ft)
Screw, water pump wheel	M6	10 Nm (7.4 lbf ft) **Loctite®243™**
Intake channel vacuum connection	M6x0.75	2.5 Nm (1.84 lbf ft) **Loctite®2701™**
Oil nozzle for piston cooling	M6x0.75	4 Nm (3 lbf ft)
Screw plug, locking screw	M8	15 Nm (11.1 lbf ft)
Screw, rocker arm shaft	M8x40	15 Nm (11.1 lbf ft)
Screw, rocker arm shaft	M8x55	15 Nm (11.1 lbf ft)
Setscrew, camshaft bearing bridge	M8	6 Nm (4.4 lbf ft) **Loctite®243™**
Stud, exhaust flange	M8	15 Nm (11.1 lbf ft) **Loctite®243™**

Screw, cylinder head	M10	Tightening sequence: Tighten diagonally, beginning with the rear screw on the timing chain shaft. 1st stage 15 Nm (11.1 lbf ft) 2nd stage 30 Nm (22.1 lbf ft) 3rd stage 45 Nm (33.2 lbf ft) 4th stage 60 Nm (44.3 lbf ft) Head flat greased **Loctite® 577™**
Screw, engine sprocket	M10	60 Nm (44.3 lbf ft) **Loctite®243™**
Screw plug, oil channel	M10x1	15 Nm (11.1 lbf ft) **Loctite®243™**
Screw plug, water pump drain hole	M10x1	15 Nm (11.1 lbf ft)
Screw, oil line	M10x1	10 Nm (7.4 lbf ft)
Screw, unlocking for timing chain tensioner	M10x1	8 Nm (5.9 lbf ft)
Spark plug outside	M10x1	11 Nm (8.1 lbf ft)
Spark plug inside	M12x1.25	18 Nm (13.3 lbf ft)
Coolant temperature sensor on the cylinder head	M12x1.5	12 Nm (8.9 lbf ft)
Oil drain plug with magnet	M12x1.5	20 Nm (14.8 lbf ft)
Screw plug, oil pressure control valve	M12x1.5	20 Nm (14.8 lbf ft)
Screw plug, oil channel	M14x1.5	15 Nm (11.1 lbf ft) **Loctite®243™**
Engine case stud	M16x1.5	25 Nm (18.4 lbf ft) **Loctite®243™**
Nut, rotor	M18x1.5	100 Nm (73.8 lbf ft) **Loctite®243™**
Nut, inner clutch hub	M20x1.5	120 Nm (88.5 lbf ft) **Loctite®243™**
Nut, primary gear wheel	M20LHx1.5	90 Nm (66.4 lbf ft) **Loctite®243™**
Plug, oil screen	M20x1.5	15 Nm (11.1 lbf ft)
Plug, oil thermostat	M24x1.5	15 Nm (11.1 lbf ft)
Plug, timing chain tensioner	M24x1.5	25 Nm (18.4 lbf ft)
Screw plug, alternator cover	M24x1.5	8 Nm (5.9 lbf ft)

22.3 Capacities

22.3.1 Engine oil

Engine oil	1.70 l (1.8 qt.)	Engine oil (SAE 10W/50) (📖 p. 122)

22.3.2 Coolant

Coolant	1.20 l (1.27 qt.)	Coolant (📖 p. 122)

22.3.3 Fuel

Fuel tank capacity, approx.	13.1 l (3.46 US gal)	Super unleaded (ROZ 95) (p. 123)

Fuel reserve, approx.	1.4 l (1.5 qt.)

22.4 Chassis

Frame	Lattice frame made of chrome molybdenum steel tubing, powder-coated
Fork	**WP Suspension** APEX
Shock absorber	**WP Suspension** APEX 5746
Suspension travel	
front	215 mm (8.46 in)
rear	240 mm (9.45 in)
Brake system	
front	Disc brake with radially mounted four-piston brake caliper, floating brake disc
rear	Disc brake with single-piston brake caliper, floating
Brake discs - diameter	
front	320 mm (12.6 in)
rear	240 mm (9.45 in)
Brake discs - wear limit	
front	4.5 mm (0.177 in)
rear	4.5 mm (0.177 in)
Tire pressure when solo	
front	2.0 bar (29 psi)
rear	2.0 bar (29 psi)
Tire pressure with passenger / full payload	
front	2.2 bar (32 psi)
rear	2.2 bar (32 psi)
Secondary drive ratio	16:42
Chain	5/8 x 1/4” X-ring
Steering head angle	63.0°
Wheelbase	1,476 ± 15 mm (58.11 ± 0.59 in)
Seat height unloaded	898 mm (35.35 in)
Ground clearance unloaded	237 mm (9.33 in)
Weight without fuel, approx.	148.2 kg (326.7 lb.)
Maximum permissible front axle load	150 kg (331 lb.)
Maximum permissible rear axle load	200 kg (441 lb.)
Maximum permissible overall weight	350 kg (772 lb.)

22.5 Electrical system

12-V battery	YTZ10S	Battery voltage: 12 V Nominal capacity: 8.6 Ah Maintenance-free
Combination instrument battery	CR 2430	Battery voltage: 3 V
Fuse	58011109130	30 A
Fuse	58011109125	25 A
Fuse	58011109115	15 A
Fuse	75011088015	15 A
Fuse	75011088010	10 A
Headlight	H4/socket P43t	12 V 60/55 W
Position light	W5W / socket W2.1x9.5d	12 V 5 W
Combination instrument lighting and indicator lamps	LED	
Turn signal	RY10W / socket BAU15s	12 V 10 W
Brake/tail light	LED	
License plate lamp	LED	

22.6 Tires

Front tire	Rear tire
120/70 ZR 17 M/C 58W TL Continental ContiAttack SM EVO	**160/60 ZR 17 M/C 69W TL** Continental ContiAttack SM EVO
The tires specified represent one of the possible series production tires. For alternative manufacturers, if any, contact an authorized dealer or qualified tire dealership. If local road approval regulations apply, these and the respective technical specifications must be observed. Additional information is available in the Service section under: http://www.gasgas.com	

22.7 Fork

Fork article number	0761C141U401102
Fork	**WP Suspension** APEX
Compression damping	
Standard	15 clicks
Rebound damping	
Standard	15 clicks
Spring length with preload spacer(s)	461.5 mm (18.169 in)
Spring rate	
Medium (standard)	5.3 N/mm (30.3 lb/in)
Fork length	878.5 mm (34.587 in)

Fork oil per fork leg	620 ± 5 ml (20.96 ± 0.17 fl. oz.)	Fork oil (SAE 5) (p. 122)

22.8 Shock absorber

Shock absorber article number	15.18.7S.12
Shock absorber	**WP Suspension** APEX 5746
High-speed compression damping	
Comfort	2 turns
Standard	1.5 turns
Sport	1 turn
Full payload	1 turn
Low-speed compression damping	
Comfort	20 clicks
Standard	15 clicks
Sport	10 clicks
Full payload	10 clicks
Rebound damping	
Comfort	20 clicks
Standard	15 clicks
Sport	10 clicks
Full payload	10 clicks
Fitted length	391 mm (15.39 in)
Spring rate	
Softer (comfort)	69 N/mm (394 lb/in)
Standard	75 N/mm (428 lb/in)
Harder (sport)	81 N/mm (463 lb/in)
Shock absorber fluid (p. 123)	SAE 2.5

22.9 Chassis tightening torques

Screw, chain guard	EJOT	1.5 Nm (1.11 lbf ft)
Screw, combination instrument	EJOT	1 Nm (0.7 lbf ft)
Screw, combination switch	**EJOT PT®** K50x18 T20	2 Nm (1.5 lbf ft)
Screw, radiator guard	**EJOT PT** K50x14 T20	2 Nm (1.5 lbf ft)
Screw, side stand sensor	EJOT	1 Nm (0.7 lbf ft)
Screw, tail light	**EJOT PT®** K45x12-Z	1.5 Nm (1.11 lbf ft)
Fitting, side stand sensor	M4	2 Nm (1.5 lbf ft)
Screw, fixed grip	M4	5 Nm (3.7 lbf ft) **Loctite®243™**
Remaining nuts, chassis	M5	5 Nm (3.7 lbf ft)
Remaining screws, chassis	M5	5 Nm (3.7 lbf ft)
Screw, brake line holder on link fork	M5	5 Nm (3.7 lbf ft)
Screw, cable on starter motor	M5	3 Nm (2.2 lbf ft)
Screw, combination switch, left	M5	3.5 Nm (2.58 lbf ft)
Screw, electrical holder	M5	3 Nm (2.2 lbf ft)
Screw, exhaust heat shield	M5	8 Nm (5.9 lbf ft)
Screw, foot brake lever stub	M5	6 Nm (4.4 lbf ft) **Loctite®243™**
Screw, fuel hose clamp on fuel tank	M5	5 Nm (3.7 lbf ft)
Screw, fuel level sensor	M5	3 Nm (2.2 lbf ft)

Screw, fuel pump	M5	4 Nm (3 lbf ft)
Screw, fuel tank closure flange	M5	2.5 Nm (1.84 lbf ft)
Screw, headlight mask	M5	2 Nm (1.5 lbf ft)
Screw, heat guard on fuel tank cover	M5x12	3.5 Nm (2.58 lbf ft)
Screw, pressure regulator	M5	4 Nm (3 lbf ft)
Screw, radiator fan cover	M5	3.2 Nm (2.36 lbf ft)
Screw, radiator guard	M5	3.5 Nm (2.58 lbf ft)
Screw, seat lock cable	M5	3 Nm (2.2 lbf ft)
Screw, throttle grip	M5	3.5 Nm (2.58 lbf ft)
Screw, upper fuel tank cover	M5x20	2 Nm (1.5 lbf ft)
Screw. rear wiring harness	M5	2 Nm (1.5 lbf ft)
Fitting on rear brake cylinder	M6	10 Nm (7.4 lbf ft)
Remaining nuts, chassis	M6	10 Nm (7.4 lbf ft)
Remaining screws, chassis	M6	10 Nm (7.4 lbf ft)
Screw brake line holder on frame	M6x12	6 Nm (4.4 lbf ft) **Loctite®243™**
Screw, ABS control unit	M6	5 Nm (3.7 lbf ft)
Screw, ABS module retaining bracket on frame	M6	10 Nm (7.4 lbf ft)
Screw, air filter box, on frame	M6	6 Nm (4.4 lbf ft)
Screw, battery cable to starter motor	M6	6 Nm (4.4 lbf ft)
Screw, battery terminal	M6	4.5 Nm (3.32 lbf ft)
Screw, brake assembly	M6	5 Nm (3.7 lbf ft)
Screw, brake fluid reservoir for rear brake	M6	5 Nm (3.7 lbf ft)
Screw, chain guard	M6	2 Nm (1.5 lbf ft) **Loctite®243™**
Screw, chain guide	M6	10 Nm (7.4 lbf ft)
Screw, chain sliding guard	M6	10 Nm (7.4 lbf ft) **Loctite®243™**
Screw, clutch assembly	M6	5 Nm (3.7 lbf ft)
Screw, combination instrument holder on triple clamp	M6x8	5 Nm (3.7 lbf ft)
Screw, coolant compensating tank	M6	2 Nm (1.5 lbf ft)
Screw, electrical holder in fuel tank	M6	2 Nm (1.5 lbf ft)
Screw, electrical holder under 12-V battery	M6	10 Nm (7.4 lbf ft)
Screw, ignition lock	M6	10 Nm (7.4 lbf ft) **Loctite®243™**
Screw, inertial measurement unit	M6	8 Nm (5.9 lbf ft)
Screw, license plate holder, bottom	M6	8 Nm (5.9 lbf ft)
Screw, license plate holder, bottom	M6x14	5 Nm (3.7 lbf ft)
Screw, license plate holder, top	M6	8 Nm (5.9 lbf ft)
Screw, lower right fuel tank cover	M6x12	5 Nm (3.7 lbf ft)
Screw, magnetic holder on side stand	M6	6 Nm (4.4 lbf ft) **Loctite®243™**
Screw, push rod ball joint on the rear brake cylinder	M6	10 Nm (7.4 lbf ft) **Loctite®243™**
Screw, radiator bleeding	M6	8 Nm (5.9 lbf ft)

Screw, radiator bracket, bottom	M6	8 Nm (5.9 lbf ft)
Screw, radiator bracket, top	M6	10 Nm (7.4 lbf ft)
Screw, radiator shield	M6x20	4.5 Nm (3.32 lbf ft)
Screw, SAS valve	M6	4 Nm (3 lbf ft)
Screw, seat lock	M6	5 Nm (3.7 lbf ft)
Screw, seat support	M6x12	5 Nm (3.7 lbf ft)
Screw, seat support, front	M6x14	6 Nm (4.4 lbf ft)
Screw, side fuel tank cover	M6x11	3 Nm (2.2 lbf ft)
Screw, tool set compartment on frame	M6x12	5 Nm (3.7 lbf ft)
Screw, tool set compartment on frame	M6x24	5 Nm (3.7 lbf ft)
Screw, upper part of the air filter box	M6	2 Nm (1.5 lbf ft)
Screw, voltage regulator	M6	8 Nm (5.9 lbf ft)
Screw, wheel speed sensor	M6	6 Nm (4.4 lbf ft) **Loctite®243™**
Handle bar end screw	M8	15 Nm (11.1 lbf ft)
Nut, manifold on cylinder head	M8	Tighten the nuts evenly. The plate should not be bent. ≤ 15 Nm (≤ 11.1 lbf ft) Copper paste
Nut, rear sprocket screw	M8	35 Nm (25.8 lbf ft) **Loctite®2701™**
Remaining nuts, chassis	M8	25 Nm (18.4 lbf ft)
Remaining screws, chassis	M8	25 Nm (18.4 lbf ft)
Screw, bottom triple clamp	M8	12 Nm (8.9 lbf ft)
Screw, chain sliding piece	M8	15 Nm (11.1 lbf ft) **Loctite®243™**
Screw, connection lever on frame	M8	30 Nm (22.1 lbf ft) **Loctite®243™**
Screw, engine sprocket cover	M8	15 Nm (11.1 lbf ft)
Screw, foot brake lever	M8	25 Nm (18.4 lbf ft) **Loctite®243™**
Screw, fork stub	M8	15 Nm (11.1 lbf ft)
Screw, front brake disc	M8	30 Nm (22.1 lbf ft) **Loctite®243™**
Screw, front footrest bracket	M8	25 Nm (18.4 lbf ft) **Loctite®243™**
Screw, fuel tank roller	M8	15 Nm (11.1 lbf ft)
Screw, fuel tank, bottom	M8	25 Nm (18.4 lbf ft) **Loctite®243™**
Screw, fuel tank, top	M8	25 Nm (18.4 lbf ft) **Loctite®243™**
Screw, grab handle	M8	10 Nm (7.4 lbf ft)
Screw, handlebar clamp	M8	20 Nm (14.8 lbf ft)
Screw, heel protector	M8x12	5 Nm (3.7 lbf ft) **Loctite®243™**
Screw, main silencer clamp	M8	12 Nm (8.9 lbf ft)
Screw, main silencer holder	M8	25 Nm (18.4 lbf ft)

Screw, main silencer holder on fuel tank	M8	25 Nm (18.4 lbf ft)
Screw, rear brake disc	M8	30 Nm (22.1 lbf ft) **Loctite®243™**
Screw, rear footrest bracket	M8x16	25 Nm (18.4 lbf ft)
Screw, side stand bracket	M8	25 Nm (18.4 lbf ft) **Loctite®243™**
Screw, spring holder plate on side stand bracket	M8	25 Nm (18.4 lbf ft) **Loctite®243™**
Screw, steering stem	M8	20 Nm (14.8 lbf ft) **Loctite®243™**
Screw, top triple clamp	M8	17 Nm (12.5 lbf ft)
Engine carrying screw	M10	45 Nm (33.2 lbf ft) **Loctite®243™**
Remaining nuts, chassis	M10	45 Nm (33.2 lbf ft)
Remaining screws, chassis	M10	45 Nm (33.2 lbf ft)
Screw, bottom shock absorber	M10	45 Nm (33.2 lbf ft) **Loctite®243™**
Screw, brake caliper bleeder, front	M10	25 Nm (18.4 lbf ft)
Screw, engine bearer on frame	M10	45 Nm (33.2 lbf ft)
Screw, handlebar support	M10	45 Nm (33.2 lbf ft) **Loctite®243™**
Screw, side stand	M10	35 Nm (25.8 lbf ft) **Loctite®243™**
Screw, top shock absorber	M10	45 Nm (33.2 lbf ft) **Loctite®243™**
Banjo bolt, brake line	M10x1	25 Nm (18.4 lbf ft)
Screw, front brake caliper	M10x1.25	45 Nm (33.2 lbf ft) **Loctite®243™**
Lambda sensor	M12x1.25	25 Nm (18.4 lbf ft) Copper paste
Screw, swingarm pivot	M12x1.5	80 Nm (59 lbf ft)
Nut, angle lever to link fork	M14x1.5	100 Nm (73.8 lbf ft)
Nut, linkage lever to rocker arm	M14x1.5	100 Nm (73.8 lbf ft)
Screw, radiator temperature sensor	M18	20 Nm (14.8 lbf ft)
Screw, bottom steering head	M20x1.5	60 Nm (44.3 lbf ft) **Loctite®243™**
Screw, top steering head	M20x1.5	12 Nm (8.9 lbf ft)
Screw, front wheel spindle	M24x1.5	45 Nm (33.2 lbf ft)
Nut, rear wheel spindle	M25x1.5	90 Nm (66.4 lbf ft)

Brake fluid DOT 4 / DOT 5.1

Standard/classification

– DOT

Guideline

– Use only brake fluid that complies with the specified standard (see specifications on the container) and that exhibits the corresponding properties.

Recommended supplier

Castrol

– **REACT PERFORMANCE DOT 4**

MOTOREX®

– **Brake Fluid DOT 5.1**

Coolant

Guideline

– Only use high-grade, silicate-free coolant with corrosion inhibitor additive for aluminum motors. Low grade and unsuitable antifreeze causes corrosion, deposits and frothing.

– Do not use pure water as only coolant is able to meet the requirements needed in terms of corrosion protection and lubrication properties.

– Only use coolant that complies with the requirements stated (see specifications on the container) and that has the relevant properties.

Antifreeze protection to at least	−25 °C (−13 °F)

The mixture ratio must be adjusted to the necessary antifreeze protection. Use distilled water if the coolant needs to be diluted.

The use of premixed coolant is recommended.

Observe the coolant manufacturer specifications for antifreeze protection, dilution and miscibility (compatibility) with other coolants.

Recommended supplier

MOTOREX®

– **COOLANT M3.0**

Engine oil (SAE 10W/50)

Standard/classification

– JASO T903 MA2 (📖 p. 125)

– SAE (📖 p. 125) (SAE 10W/50)

Guideline

– Use only engine oils that comply with the specified standards (see specifications on the container) and that possess the corresponding properties.

Fully synthetic engine oil

Recommended supplier

MOTOREX®

– **Power Synt 4T**

Fork oil (SAE 5)

Standard/classification

– SAE (📖 p. 125) (SAE 5)

Guideline

– Use only oils that comply with the specified standards (see specifications on the container) and that possess the corresponding properties.

Recommended supplier
MOTOREX®
– **Racing Fork Oil**

Shock absorber fluid (SAE 2.5) (50180751S1)

Standard/classification
– SAE (📖 p. 125) (SAE 2.5)

Guideline
– Use only oils that comply with the specified standards (see specifications on the container) and that exhibit the corresponding properties.

Super unleaded (ROZ 95)

Standard/classification
– DIN EN 228 (ROZ 95)

Guideline
– Only use super unleaded fuel that matches or is equivalent to the specified standard.
– Fuel with an ethanol content of up to 10% (E10 fuel) is safe to use.

Info
Do **not** use fuel containing methanol (e.g., M15, M85, M100) or more than 10% ethanol (e.g., E15, E25, E85, E100).

Chain cleaner

Recommended supplier
MOTOREX®
– **Chain Clean**

Fuel additive

Recommended supplier
MOTOREX®
– **Fuel Stabilizer**

Long-life grease

Recommended supplier
MOTOREX®
– **Bike Grease 2000**

Motorcycle cleaner

Recommended supplier
MOTOREX®
– **Moto Clean**

Preserving materials for paints, metal and rubber

Recommended supplier
MOTOREX®
– **Moto Protect**

Shine spray for paint, plastic and chromium

Recommended supplier
MOTOREX®
– **Moto Shine**

Special cleaner for glossy and matte paint finishes, metal and plastic surfaces

Recommended supplier
MOTOREX®
– **Quick Cleaner**

Street chain spray

Guideline

Recommended supplier
MOTOREX®
– **Chainlube Road Strong**

Universal oil spray

Recommended supplier
MOTOREX®
– **Joker 440 Synthetic**

JASO T903 MA2

Different technical development directions required a separate specification for motorcycles – the **JASO T903 MA2** standard.
Earlier, engine oils from the automobile industry were used for motorcycles because there was no separate motorcycle specification.
Whereas long service intervals are demanded for automobile engines, the focus for motorcycle engines is on high performance at high engine speeds.
In most motorcycle engines, the transmission and clutch are lubricated with the same oil.
The **JASO T903 MA2** standard meets these special requirements.

SAE

The SAE viscosity classes were defined by the Society of Automotive Engineers and are used for classifying oils according to their viscosity. The viscosity describes only one property of oil and says nothing about quality.

ABS	Anti-lock braking system	Safety system that prevents locking of the wheels when driving straight ahead without the influence of lateral forces
MTC	Motorcycle Traction Control	Auxiliary function of the motor control that reduces engine torque with spinning rear wheel
OBD	On-board diagnosis	Vehicle system, which monitors the specified parameters of the vehicle electronics
-	QUICKSHIFTER+	Engine tuning function for shifting up and down without clutch actuation

Art. no.	Article number
ca.	circa
cf.	compare
e.g.	for example
etc.	et cetera
i.a.	inter alia
no.	number
poss.	possibly

28 LIST OF SYMBOLS

28.1 Red symbols

Red symbols indicate an error condition that requires immediate intervention.

	The coolant temperature warning lamp lights up red – The coolant temperature has reached a critical value. Stop immediately (taking care not to endanger yourself or other road users in the process), switch off the engine, allow it to cool down and check the coolant level.
	The oil pressure warning lamp lights up red – The oil pressure is too low. Stop immediately, taking care not to endanger yourself or other road users in the process, and switch off the engine.

28.2 Yellow and orange symbols

Yellow and orange symbols indicate an error condition that requires prompt intervention. Active driving aids are also represented by yellow or orange symbols.

	ABS warning lamp lights up/flashes yellow – If the ABS warning lamp lights up, the ABS is not active. The ABS warning lamp also lights up if an error is detected. Contact an authorized GASGAS Motorcycles workshop.
	Fuel level warning lamp lights up orange – The fuel level has reached the reserve mark.
	Malfunction indicator lamp lights up orange – The OBD has detected an error in the vehicle electronics. Come safely to a halt, and contact an authorized GASGAS Motorcycles workshop.
	TC indicator lamp lights up/flashes yellow – If the TC indicator lamp lights up, the MTC (p. 38) is not active. If the TC indicator lamp and both riding mode lamps light up at same time, an error has been detected. Contact an authorized GASGAS Motorcycles workshop. The TC indicator lamp flashes if the MTC actively engages.

28.3 Green and blue symbols

Green and blue symbols reflect information.

	The high beam indicator lamp lights up blue – The high beam is switched on.
	The idle indicator lamp lights up green – The transmission is in neutral.
	Turn signal indicator lamp flashes green – The turn signal is switched on.

1

12-V battery
installing . . . 83
removing . . . 82

12-V battery
charging . . . 84

A

ABS . . . 67
ABS button . . . 21

ABS fuses
changing . . . 86

ACC1
front . . . 93

ACC2
front . . . 93

Air filter
installing . . . 58
removing . . . 57

Anti-lock braking system . . . 67
Auxiliary substances . . . 13

B

Brake discs
checking . . . 68

Brake fluid
front brake, adding . . . 69
rear brake, adding . . . 73

Brake fluid level
front brake, checking . . . 69
rear brake, checking . . . 72

Brake lining retainers
of front brake, checking . . . 70
of rear brake, checking . . . 74

Brake linings
of front brake, checking . . . 70
of rear brake, checking . . . 74

Brakes . . . 38
Braking . . . 38

Breakdown
towing . . . 40

C

Capacity
coolant . . . 99, 115
engine oil . . . 104, 115
fuel . . . 42, 116

Chain
checking . . . 61
cleaning . . . 59
dirt, checking for . . . 58

Chain guide
adjusting . . . 64
checking . . . 61

Chain tension
adjusting . . . 60
checking . . . 59

Changing the headlight bulb . . . 89

Clutch
fluid level, checking/correcting . . . 65

Clutch lever . . . 18
basic position, adjusting . . . 65

Combination instrument
activation . . . 25
adjusting . . . 25
combination instrument battery, changing . . . 92
messages . . . 25
overview . . . 25
service display, setting . . . 27
setting kilometers or miles . . . 26
setting the clock . . . 27

Coolant
antifreeze and coolant level, checking . . . 94
changing . . . 98
draining . . . 96
level, checking . . . 95

Cooling system . . . 94
filling/bleeding . . . 97

Cornering MTC . . . 38
Customer service . . . 13

D

Diagnostics connector . . . 93

E

Emergency OFF switch . . . 19

Engine
running in . . . 31

Engine number . . . 17

Engine oil
adding . . . 105
changing . . . 102

Engine oil level
checking . . . 102

Engine sprocket
checking . . . 61

Environment . . . 11

F

Figures . . . 13

Foot brake lever . . . 23
basic position, adjusting . . . 71
free travel, checking . . . 71

Fork . . . 45
compression damping, adjusting . . . 45
dust boots, cleaning . . . 52
rebound, adjusting . . . 45

Fork part number 17
Fork protector
installing 53
removing 52
Front fender
installing 57
removing 57
Front wheel
installing 75
removing 75
Fuel tank filler cap
closing 24
opening 23
Fuel, oils, etc. 13
Fuse
of individual electrical power consumers, changing 87

G

Grab handles 22

H

Hand brake lever 18
basic position, adjusting 68
Handlebar position 48
adjusting 48
Headlight
range, adjusting 92
setting, checking 91
Headlight mask with headlight
installing 88
removing 88
Horn button 18

I

Ignition lock 20
Implied warranty 13
Intended use 6

K

Key number 16

L

Light switch 19
Loading the vehicle 31
Luggage 31

M

Main fuse
changing 85
Manufacturer warranty 13
Misuse 6
Motorcycle
cleaning 106
lift stand, raising with 50
lift stand, removing from 50
lifting with front lifting gear 51
removing the rear from the wheel stand 51
taking off front lifting gear 51
with lifting gear at rear, raising 50
Motorcycle traction control 38

O

Oil filter
changing 102
Oil screens
cleaning 102
Overview of indicator lights 21
Owner's Manual 12

P

Parking 39
Passenger foot pegs 22
Position light lamp
changing 90
Preparing for use
advice on preparing for first use 30
after storage 109
checks and maintenance measures when preparing for use 33
Protective clothing 11

Q

QUICKSHIFTER+ 37

R

Rear hub damping rubber pieces
checking 79
Rear sprocket
checking 61
Rear wheel
installing 78
removing 77
Refueling
fuel 41
Riding 35
starting off 34
Riding mode
changing 100
Rubber grip
checking 64

S

Safe operation 10
Seat
mounting 53
removing 53
unlocking 22
Service 13
Service schedule 43-44
Shift lever 22
basic position, adjusting 101

basic position, checking 101
Shifting 35
Shock absorber 45
compression damping, general 46
high-speed compression damping, adjusting 47
low-speed compression damping, adjusting 46
rebound damping, adjusting 48
Shock absorber article number 17
Side cover
mounting 56
removing 55
Side stand 23
Spare parts 13
Start button 19
Starting 33
Steering lock 20
Stopping 39
Storage 108

T

Technical accessories 13
Technical specifications
capacities 115
chassis 116
chassis tightening torques 118
electrical system 117
engine 112
engine tightening torques 113
fork 117
shock absorber 118
tires 117
Throttle grip 18
Tire condition
checking 80
Tire pressure
checking 81
Tire repair spray
using 81
Tool set
removing 53
storing 54
Towing 40
Traction control
adjusting 100
Transport 40
Troubleshooting 110-111
Turn signal bulb
changing 90
Turn signal switch 19
Type label 16

U

Use definition 6

V

Vehicle identification number 16
View of vehicle
front left 14
rear right 15

W

Winter operation
checks and maintenance steps 107
Work rules 11

3215135en

13.08.2024

GASGAS

Stallhofnerstraße 3 / 5230 Mattighofen / Austria / http://www.gasgas.com